GrillandPatio.com | 866-688-4647

RH PETERSON CO.

realfyre
PREMIUM GAS LOGS

INSTALLATION & OWNER'S MANUAL

Models:
EPK-2V(P)-TR
EPK-3V(P)-TR

2V model shown

- **INTERMITTENT SPARK IGNITION PILOT**
- **REMOTE OR MANUAL OPERATION**
- **AC POWER OPERATION**
- **VARIABLE FLAME HEIGHT CONTROL**

(Suitable for G4 and G45 series burners)

EPK-2V/3V-TR PILOT KITS

WARNING

If the information in this manual is not followed exactly, a fire or explosion may result, causing property damage, personal injury, or loss of life.

Do not store or use gasoline or other flammable vapors and liquids in the vicinity of this or any other appliance.

WHAT TO DO IF YOU SMELL GAS:

- Open a window.
- Do not try to light any appliance.
- Do not touch any electrical switch; do not use any phone in the building.
- Immediately call the gas supplier from a neighbor's phone and follow the gas supplier's instructions.
- If you cannot reach the gas supplier, call the fire department.

Installation and service must be performed by an NFI Certified or other qualified professional installer, service agency, or the gas supplier.

INSTALLER & CONSUMER
These instructions **MUST** be retained with this appliance

Important: Read these instructions carefully before starting installation of the burner control system.

The Peterson Real-Fyre® burner system is to be installed only in a solid-fuel-burning fireplace with a working flue constructed of noncombustible material. Solid fuels shall not be burned in a fireplace where the unit is installed. The installation, including provisions for combustion, ventilation air, and required minimum permanent vent opening, must conform with the *National Fuel Gas Code (ANSI Z223.1/NFPA 54)* and applicable local building codes. In Canada, the installation must conform with the *Natural Gas and Propane Storage and Handling Installation Code (CSA-B-149.1).* A damper stop clamp is included to maintain the minimum permanent vent opening and to prevent full closure of the damper blade. **The chimney damper must be fixed fully opened when burning the unit. The burner system is designed to burn with yellow flames; thus, adequate ventilation is absolutely necessary.**

NATIONAL FIREPLACE INSTITUTE NFI CERTIFIED www.nficertified.org

We recommend that our gas hearth products be installed and serviced by professionals who are certified in the U.S. by the National Fireplace Institute® (NFI) as NFI Gas Specialists.

TABLE OF CONTENTS

GETTING STARTED

IMPORTANT INFORMATION 3
SPECIFICATIONS 4
REPLACEMENT PARTS LIST - 2V MODEL 5
REPLACEMENT PARTS LIST - 3V MODEL 6

INSTALLATION

INSTALLATION 7
PREPARATION 7
INSTALL PILOT MOUNTING BRACKET 7
INSTALL THE VALVE 7
INSTALL THE FLAME DIVERTER BRACKET 8
INSTALL THE PILOT/IGNITER ASSEMBLY TO THE BURNER 8
CONNECT TO GAS SUPPLY 9
CONNECT TO A POWER SUPPLY 10
INSTALL/REPLACE REMOTE TRANSMITTER BATTERIES 10
HEAT SHIELD PLACEMENT 10
DECORATIVE MEDIA REPLACEMENT 10

USE, CARE, & SERVICE

LIGHTING INSTRUCTIONS 11
REMOTE LIGHTING 11
MANUAL LIGHTING 12
PILOT APPEARANCE 12
SHUTTING DOWN 12
REMOTE OPERATING INSTRUCTIONS 13
ORIENTATION 13
FLAME HEIGHT 13
TIMER 13
TEMPERATURE INDICATOR (˚F or ˚C) 13
TROUBLESHOOTING 14
SYNCING THE REMOTE 14
ELECTRONIC PILOT TROUBLESHOOTING 15
WARRANTY 16

IMPORTANT INFORMATION

CHECK TO BE SURE THAT THE PROPER FUEL GAS IS BEING USED WITH THIS PILOT KIT.

The installation, including provisions for combustion and ventilation air, must conform with local codes, or in the absence of local codes, with the National Fuel Gas Code (ANSI Z223.1/NFPA 54).

This component and its individual shutoff valve must be disconnected from the gas-supply piping system when testing at pressures that exceed $^1/_2$ psig. This is accomplished by closing the gas-supply line valve.

This component must be isolated from the gas-supply piping system by closing its individual manual shutoff valve during any testing of the gas-supply system at test pressures up to and including $^1/_2$ psig.

A fireplace screen must be in place when the gas burner system is in operation. Unless other provisions for combustion air are provided, the screen shall have an opening(s) for introduction of combustion air.

WHEN GLASS FIREPLACE ENCLOSURES (DOORS) ARE USED, OPERATE THE BURNER SYSTEM WITH THE GLASS DOORS FULLY OPEN; BOTH SIDES IF THE FIREPLACE IS A SEE-THROUGH TYPE.

This appliance may be installed in an aftermarket, permanently located, manufactured (mobile) home where not prohibited by local codes. Installation of appliances designed for manufactured homes or mobile homes must conform with *Manufactured Home Construction and Safety Standard, Title 24 CFR, Part 3280* in the U.S.; or with *CAN/CSA Z240 MH* in Canada; or with *ANSI/NCSBCS A225.1/NFPA 501A, Manufactured Home Installations Standard* when such as standard is not applicable.

Do not use this appliance if any part has been underwater. Immediately call a qualified service technician to inspect the appliance and to replace any part of the control system and any gas control that has been underwater.

IT IS CRITICAL THAT THE HEAT SHIELD BE PLACED CORRECTLY OVER THE VALVE FOR THE UNIT TO OPERATE CORRECTLY.

SPECIFICATIONS

Minimum firebox dimensions required for burner system (with EPK valve attached):

Burner size	Min. Firebox Dimensions			
	Center Width *		Depth	Height
	EPK-2V	EPK-3V		
16/19"	31"	39"	16"	18"
18/20"	32"	40"	16"	18"
24"	36"	44"	16"	18"
30"	42"	50"	16"	18"
36"	48"	56"	16"	18"
42"	54"	62"	16"	18"
48"	60"	68"	16"	18"
54"	66"	74"	16"	18"
60"	72"	80"	16"	18"

* This required width allows for centering of the log set.

Table 1 - Minimum Firebox Dimensions

Model	BTUs	
	Nat.	L.P.
EPK-2V(P)	120 k	180 k
EPK-3V(P)	200 k	320 k

Table 2 - Maximum BTUs

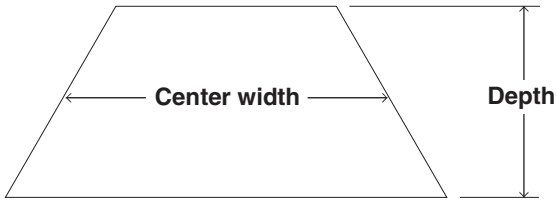

EPK-2V WIRING DIAGRAM

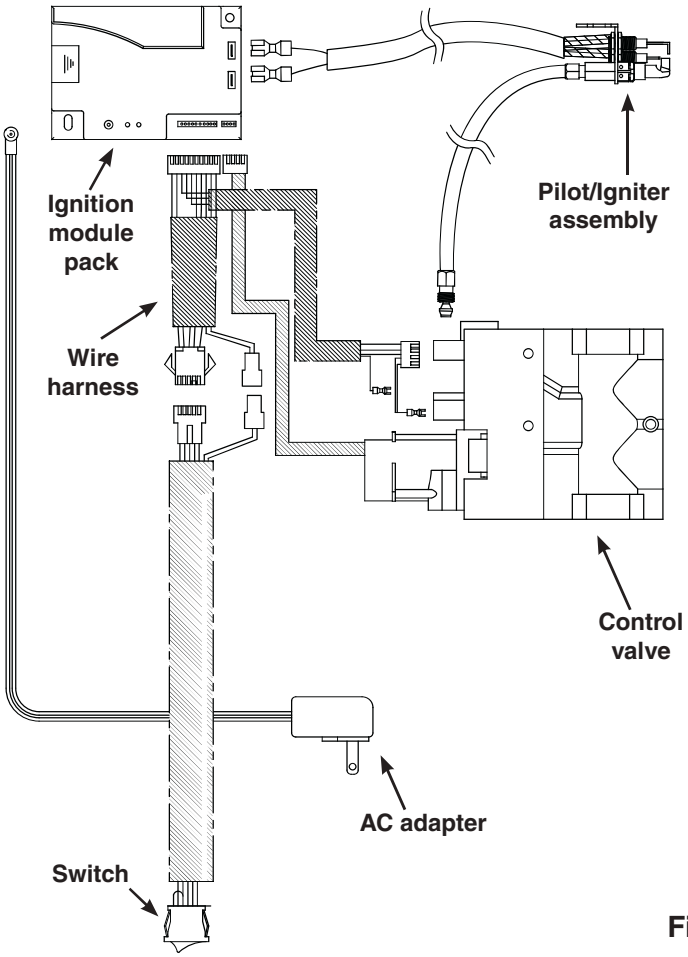

EPK-3V WIRING DIAGRAM

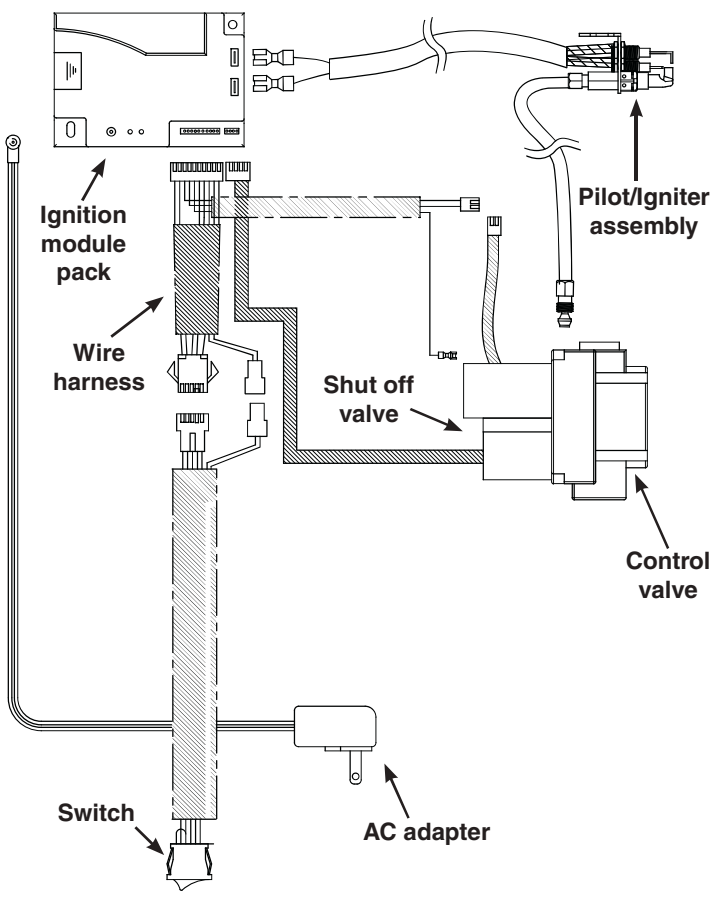

Fig. 4-1

REPLACEMENT PARTS LIST - 2V MODEL

DO NOT REMOVE THE PILOT/IGNITER ASSEMBLY FROM THE VALVE OR IGNITER PACK.

Note: Photos not to scale

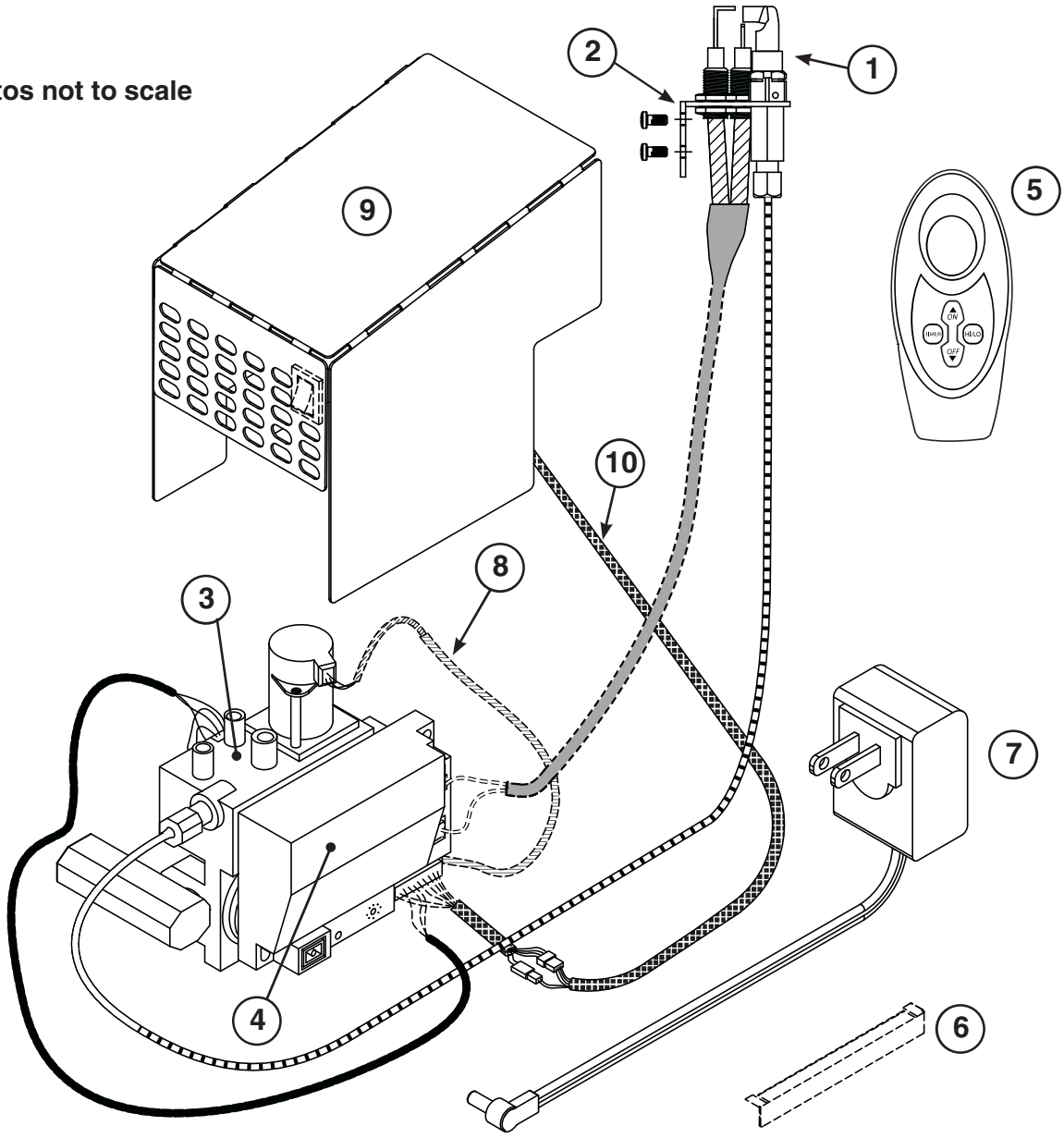

Item	Description	Part No.	Qty.
1.	Pilot/igniter assembly (natural)	PAC-11	1
or	Pilot/igniter assembly (propane)	PAC-11P	1
2.	Pilot mounting bracket kit	PB-51	1
3.	Control valve w/ wire harness (Nat.)	SV-49	1
or	Control valve w/ wire harness (L.P.)	SV-49P	1
4.	Ignition module pack	IMP-5	1
5.	Remote	AT-12V-1	1
6.	Flame diverter bracket	SH-1	1
7.	Power supply	TR-02	1
8.	Main valve wire harness	WH-03	1
9.	Heat shield	HS-41	1
10.	Switch w/ wire harness	SW-22	1

REPLACEMENT PARTS LIST - 3V MODEL

DO NOT REMOVE THE PILOT/IGNITER ASSEMBLY FROM THE VALVE OR IGNITER PACK.

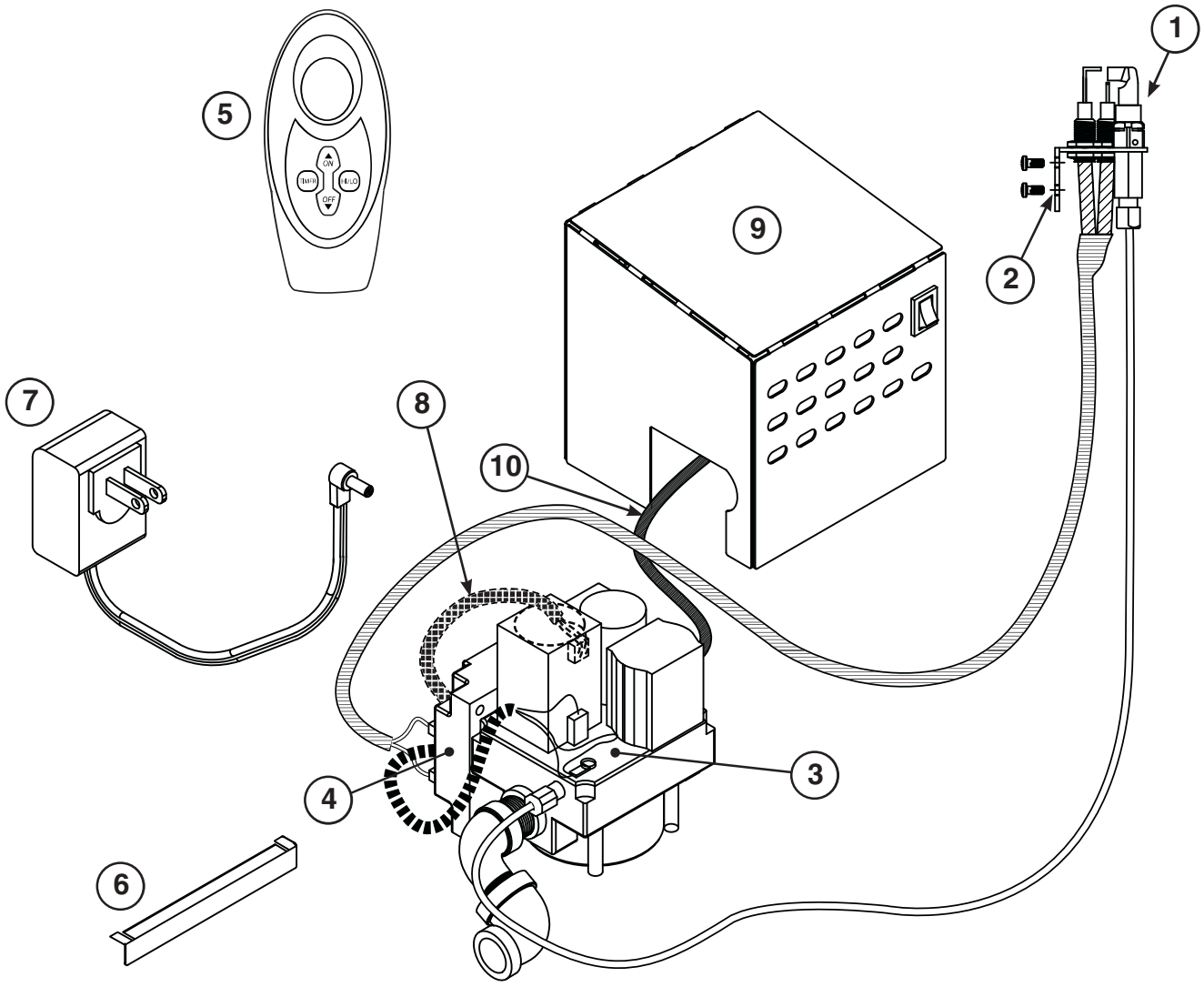

Note: Photos not to scale

Item	Description	Part No.	Qty.
1.	Pilot/igniter assembly (natural)	PAC-11	1
or	Pilot/igniter assembly (propane)	PAC-11P	1
2.	Pilot mounting bracket kit	PB-51	1
3.	Control valve w/ wire harness (Nat.)	SV-48	1
or	Control valve w/ wire harness (L.P.)	SV-48P	1
4.	Ignition module pack	IMP-5	1
5.	Remote	AT-12V-1	1
6.	Flame diverter bracket	SH-1	1
7.	Power supply	TR-02	1
8.	Main valve wire harness	WH-04	1
9.	Heat shield	HS-42	1
10.	Switch w/ wire harness	SW-22	1

INSTALLATION

This safety pilot system must be installed by a qualified professional service technician. Instructions must be followed carefully when installing to ensure proper performance and full benefit from the burner system and safety pilot system.

These instructions must be used as a supplement to the instructions supplied with the R.H. Peterson burner system. Follow the burner system instructions and make adjustments as appropriate for the addition of a safety pilot system. Use gas pipe sealing compound that is resistant to all gasses (or Teflon tape) and apply to all male pipe connections. Make sure that all connections are tight.

The valve system is shipped pre-assembled for easy installation onto the burner pan. **Perform installation with care ensuring not to damage the pilot assembly, or the wires that connect the components and heat shield.**

Note: Installation is easier when done outside of the fireplace.

PREPARATION

If the burner that the valve system is to be added to is already installed; remove all decorative media, set aside to be reinstalled later, and disconnect the flex connector and adapter from the burner pan (using the instructions that came with the original burner).

INSTALL PILOT MOUNTING BRACKET

The pilot assembly comes with an L-shaped mounting bracket.Remove the two phillips screws holding the bracket in place, then use them to fasten the bracket to burner pan (short side toward the back of the pan) using the pre-drilled holes in the pan (see Fig. 7-1).

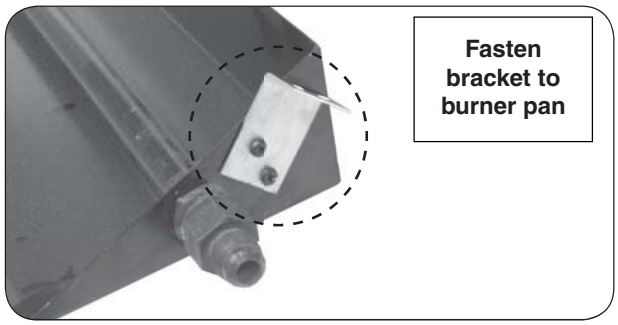

Fig. 7-1

INSTALL THE VALVE

1. Apply gas pipe sealing compound (or Teflon tape) to the male end of the fuel injector or air mixer on the burner.
2. Attach the adapter (pre-assembled to valve) to the fuel injector or air mixer by screwing the pan into the adapter (Fig. 7-2). Take care not to damage the attached pilot assembly when rotating the burner pan. Be sure all connections are tight.

Important: The rear of the valve may need to be angled slightly upward to allow for the pan to sit flat against the fireplace floor. Adjust as necessary.

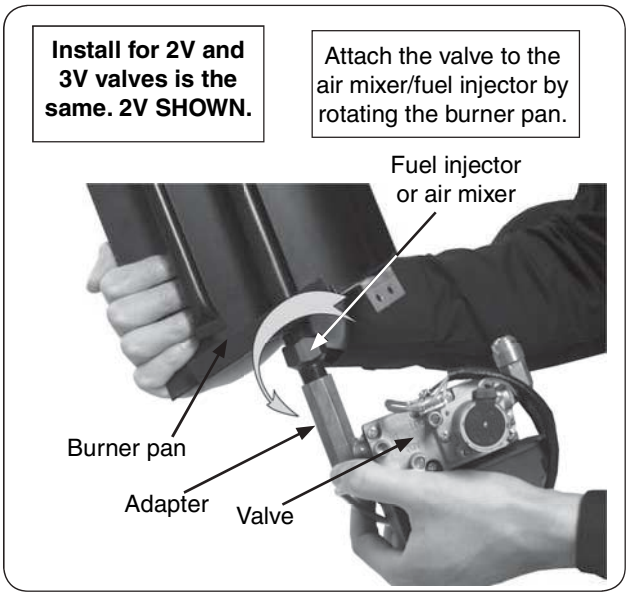

Fig. 7-2

INSTALL THE FLAME DIVERTER BRACKET

For installation on G4/G45 burners only. When properly installed onto the burner pan, the flame diverter bracket will promote quicker ignition and protect the safety control system from overheating.

Note: You must first install the flame diverter bracket before installing the pilot/igniter assembly .

1. Place the flame diverter bracket over the side edge of the burner pan, near the location the safety control system pilot bracket will be attached. It should be placed **approximately 2-1/2"** from the rear wall of the burner pan (see Fig. 8-1).
2. Tap the bracket lightly with a hammer to secure it in place.

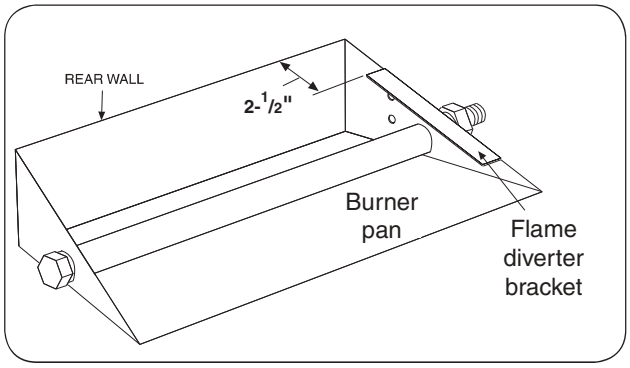

Fig. 8-1

INSTALL THE PILOT/IGNITER ASSEMBLY TO THE BURNER

CAUTION: Use only the pilot assembly pre-assembled with this kit. Never substitute with an existing pilot.

CAUTION: Do not kink or damage the pilot supply tube, sparking, and sensor probes. Do not unscrew the gas line from the valve.

1. Using the two (2) remaining screws, mount the pilot assembly onto the bracket (from below) and tighten until snug (Fig. 8-2). **Check to be certain the pilot hood and probes are situated above the edge of the pan. Adjust if necessary.**
2. The valve is shipped with the pilot supply tube bent in an ideal manner to prevent damage / unsafe operation, and to allow for proper heat shield placement. Maintain this orientation at all times (reference figures on following page).

WARNING: Keep the pilot/igniter assembly clear at all times. Never cover any part of the pilot/ igniter assembly.

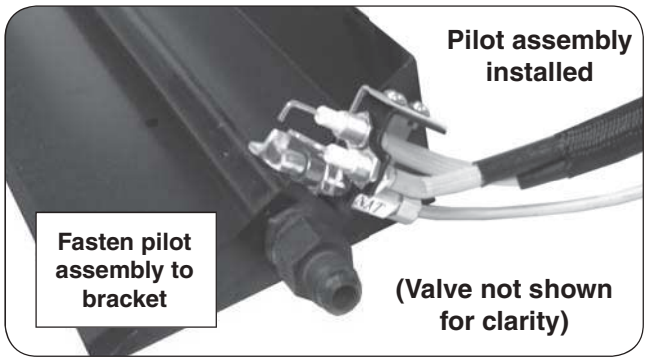

Fig. 8-2

CONNECT TO GAS SUPPLY

To connect the valve to the gas supply, the flex connector kit and component parts will be needed, which are included with the burner system. Refer to the PARTS LIST in the instructions supplied with the burner to identify the key parts needed.

1. MAKE SURE THE FIREPLACE GAS SUPPLY IS TURNED OFF.
2. Locate the gas-supply stub inside the fireplace and remove the cap, if attached.

CAUTION: When removing the cap, make sure the stub does not turn, loosening the connection inside the wall.

3. Attach the flex connector to the elbow/adapter on the control valve (see Fig. 9-1 or Fig. 9-2). Use Teflon tape or pipe compound. Tighten securely. (Discard the smaller connector adapter from the connector kit, as this is not needed.)
4. Place the burner system in the fireplace. Center the burner in the fireplace.
5. **Be sure gas to the fireplace is off.** Attach the large adapter (included with burner flex connector kit) to the gas-supply stub using a pipe compound resistant to all gasses. Tighten securely. Then attach the open end of the flex connector to the large adapter. Tighten securely.
6. LEAK TEST: Turn on the fireplace gas supply, and test at all connections for leaks using the appropriate soapy water solution. If bubbles appear, a leak is present. Turn off the gas and tighten at all connections. Repeat until no leaks are present. If a leak persists, turn off the gas supply and contact the local gas company or dealer. NEVER USE A FLAME TO CHECK FOR LEAKS.
7. Follow the instructions supplied with the Peterson burner system for any additional requirements regarding specific burner setup and placement.

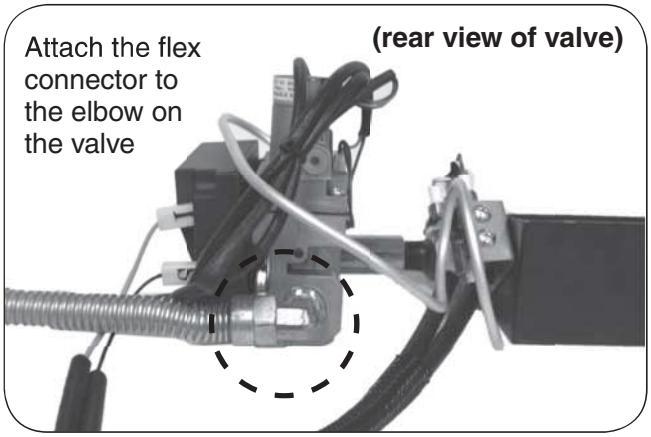

Fig. 9-1 2V models: Attach flex to valve

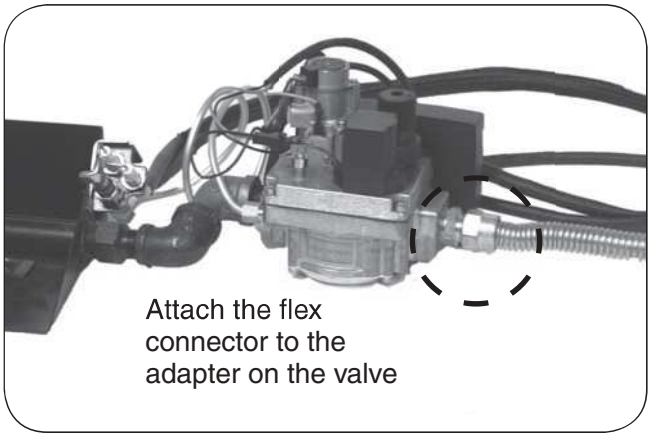

Fig. 9-2 3V models: Attach flex to valve

CONNECT TO A POWER SUPPLY

CAUTION: ENSURE THE UNIT IS CONNECTED TO THE GAS LINE AND HAS BEEN TESTED FOR LEAKS BEFORE YOU CONNECT TO A POWER SUPPLY.

Locate the supplied power supply and connect it to the ignition module pack, then route it to a GFCI 120VAC receptacle (not included) as approriate for your setup. Observe all codes. See Fig. 10-1.

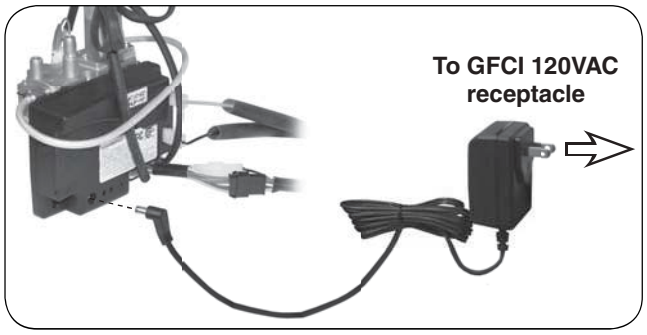

Fig. 10-1 Connect cord to module / power supply

INSTALL/REPLACE REMOTE TRANSMITTER BATTERIES

CAUTION: ENSURE THE UNIT IS CONNECTED TO THE GAS LINE AND HAS BEEN TESTED FOR LEAKS BEFORE YOU INSERT BATTERIES.

The remote transmitter requires 3 "AAA" batteries to operate. Locate the transmitter, remove the lid (found on rear), and properly insert new batteries as marked. Re-secure the lid. See Fig. 10-2.

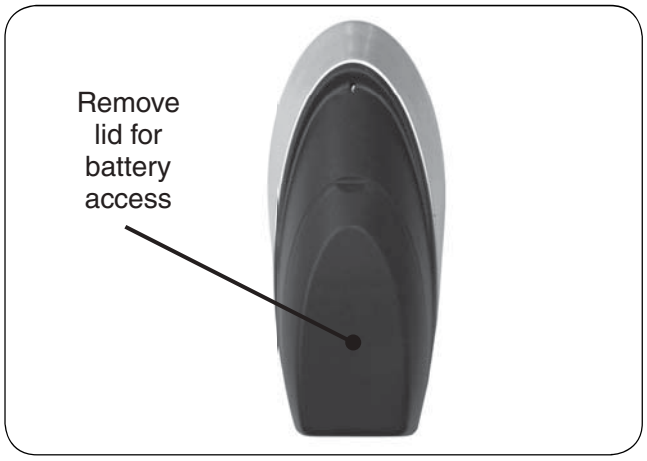

Fig. 10-2 Install/replace transmitter batteries

HEAT SHIELD PLACEMENT

Cover the valve with the heat shield as shown in Fig. 10-3 or Fig. 10-4.

It is critical that the heat shield be placed correctly over the valve for the unit to operate properly. The switch wire connecting the heat shield to the ignition module pack is to be routed along the interior right side of the heat shield. Keep all wires inside of the heat shield and/or away from the flame. Keep the area above the heat shield clear of decorative media or any other object.

Important: Ensure the pilot supply tube does not interfere with heat shield placement. For 2V models, the tube will come out of the rear and coil back to the pilot. For 3V models, the tube will come out of the left side of the heatshield and coil to the pilot.

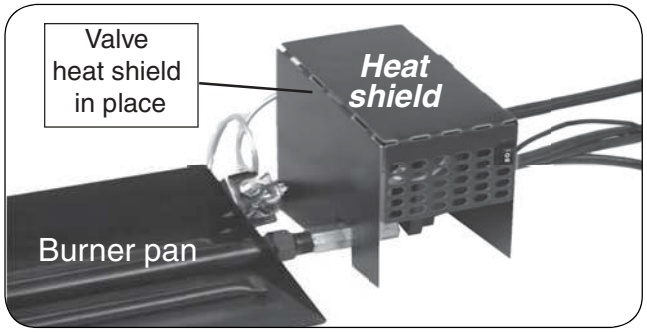

Fig. 10-3 2V models: Place heat shield

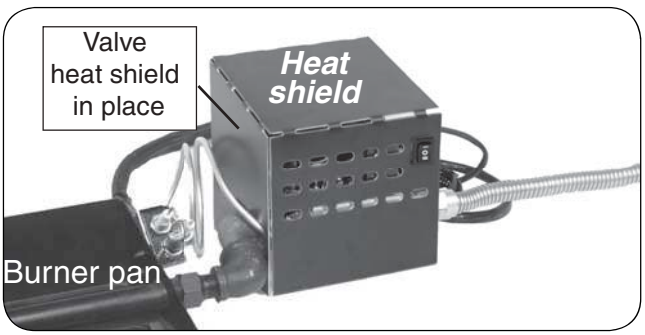

Fig. 10-4 3V models: Place heat shield

DECORATIVE MEDIA REPLACEMENT

Refer to the burner instructions for proper replacement of decorative media.

LIGHTING INSTRUCTIONS

FOR YOUR SAFETY READ BEFORE LIGHTING

WARNING: If you do not follow these instructions exactly, a fire or explosion may result causing property damage, personal injury or loss of life.

A. This appliance is equipped with an ignition device that automatically lights the pilot. DO NOT attempt to light the pilot by hand.

B. BEFORE OPERATING, smell all around the appliance area for gas. Be sure to smell next to the floor because some gas is heavier than air and will settle on the floor.

WHAT TO DO IF YOU SMELL GAS

- Do not light any appliance.
- Do not touch any electric switch; do not use any phone in your building.
- Immediately call your gas supplier from a neighbor's phone. Follow the gas supplier's instructions. If you cannot reach your gas supplier, call the fire department.

C. Use only the supplied switch or the control/remote system components to light the pilot. This valve will not operate if the pilot is not lit and stable.

D. Do not use this appliance if any part has been under water. Immediately call a qualified service technician to inspect the appliance and to replace any part of the control system and any gas control which has been under water. Attempted operation may result in fire or explosion resulting in property damage, personal injury or loss of life.

REMOTE LIGHTING

CAUTION: DO NOT attempt to light the pilot by hand.

Note: Step 1 may not be required if previously done during an earlier lighting.

1. Locate the 3-position switch found on the front of the heatshield (see Fig. 11-1). Press the switch down to the **REMOTE** position.

2. Locate the remote transmitter and press the **ON** key (see Fig. 11-2). The ignition sequence will begin.

The remote receiver will emit an audible "beep"; then the igniter will begin to spark. After the pilot lights and is established, the valve will automatically open and the burner will light. Adjust to the desired setting(s) with the remote transmitter. See the REMOTE OPERATING INSTRUCTIONS section for details.

Note: The ignition sequence will take approximately 5 seconds.

WARNING: If the pilot fails to light within 10 seconds, press the OFF button on the remote transmitter or move the switch to the center OFF position to turn OFF the system. Allow five (5) minutes for any gas in the unit to dissipate, then repeat step 2 above. IF YOU SMELL GAS, SEE STEP B ABOVE.

If the pilot fails to light after several tries, turn all control/remote system components to **OFF** and contact a qualified professional service technician.

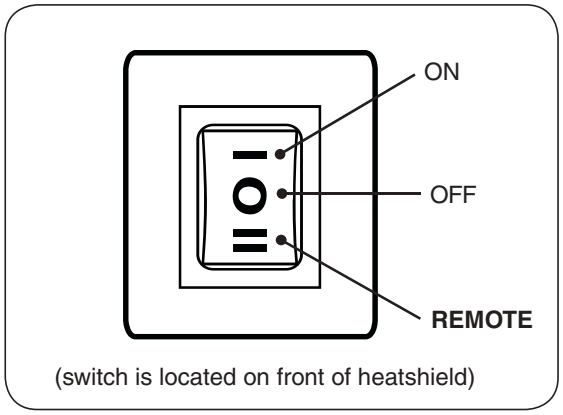

Fig. 11-1 Switch detail

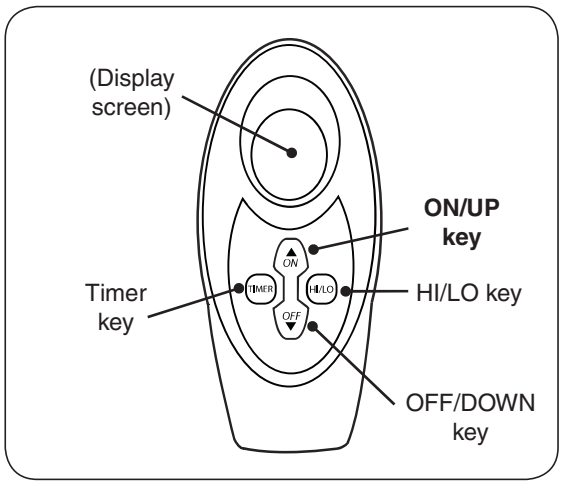

Fig. 11-2 Remote transmitter detail

MANUAL LIGHTING

CAUTION: DO NOT attempt to light the pilot by hand.

1. Locate the 3-position switch found on the front of the heatshield (see Fig. 12-1). Press the switch up to the **ON** position.

   The remote receiver will emit an audible "beep"; then the igniter will begin to spark. After the pilot lights and is established, the valve will automatically open and the burner will light.

Note: The ignition sequence will take approximately 5 seconds.

WARNING: If the pilot fails to light within 10 seconds, turn OFF the system. Allow five (5) minutes for any gas in the unit to dissipate, then repeat step 2 above. IF YOU SMELL GAS, SEE STEP B ABOVE.

If the pilot fails to light after several tries, turn the system **OFF** and contact a qualified professional service technician.

Note: In manual mode, the remote transmitter will not operate the burner system.

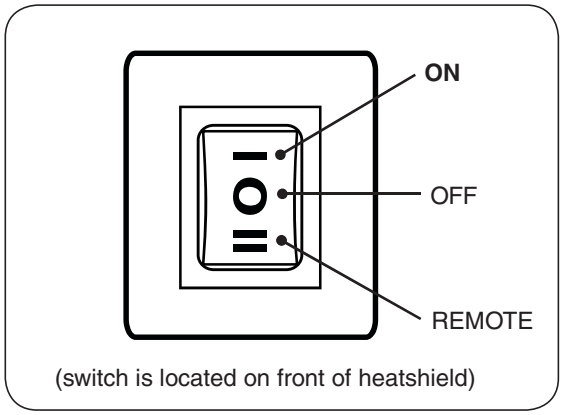

Fig. 12-1 Switch detail

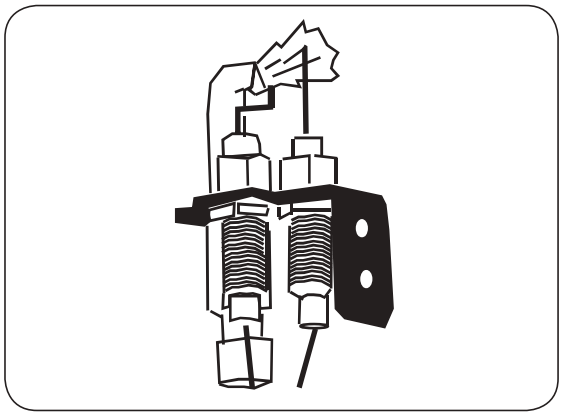

Fig. 12-2 Proper pilot flame

PILOT APPEARANCE

Periodically check the pilot for proper flame pattern. The pilot flame should encircle the generator tip, and is preset at the factory (see Fig. 12-2).

If the pilot flame burns incorrectly; shut down completely and contact a qualified professional service technician.

SHUTTING DOWN

- **For a remote shut down,** press the **OFF** button on the remote transmitter.
- **For a manual shutdown (or if your remote is lost),** press the switch found on the front of the heatshield to the center **OFF** position.

REMOTE OPERATING INSTRUCTIONS

ORIENTATION

Prior to remote transmitter use, light the appliance per the REMOTE LIGHTING section. The remote will only operate the burner system in remote mode. Familiarize yourself with the transmitter keys and display, as illustrated in Fig. 13-1 and Fig. 13-2.

Identify the four transmitter keys:

- **ON/OFF KEYS:** These keys turn the system ON or OFF.
- **HI/LO KEY:** This key, when the system is on, is used to set the desired flame height via the Flame Height mode.
- **TIMER KEY:** This key, when the system is on, is used to set the desired time via the Timer mode.
- **UP/DOWN KEYS:** In Flame Height or Timer mode, the ON/OFF keys become UP/DOWN keys to increase or decrease the Flame Height or Timer amount.

The display will show all active icons on the screen.

FLAME HEIGHT

Five flame height levels are available. Press the HI/LO key to enter the Flame Height mode. A number 1 - 5 will be displayed at the bottom of the screen. Pressing the Up/Down keys once will increase/decrease the flame height by 1 of 5 increments. See Fig. 13-3.

TIMER

In Timer Mode, the unit will remain functioning until the set amount of time has expired. Press the Timer key to enter the Timer mode. Pressing the Up/Down keys once in this mode will increase/decrease the set time in increments of 10 minutes. See Fig. 13-4.

To turn off the timer mode press the OFF key. This will turn off the unit.

TEMPERATURE INDICATOR (˚F or ˚C)

The temperature can be displayed in °F or °C. When you first install the batteries, the temp indicator at the top of the screen will be flashing. Use the Up/Down keys to switch between °F or °C.

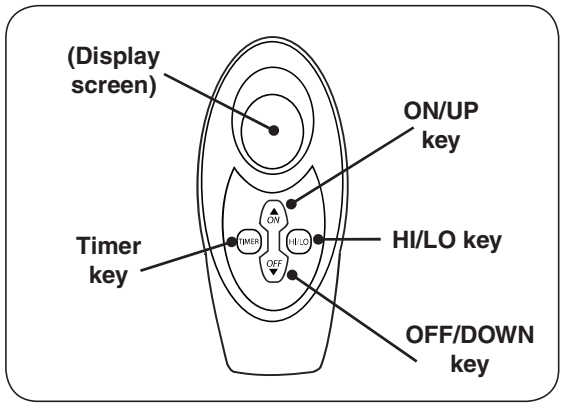

Fig. 13-1 Remote transmitter detail

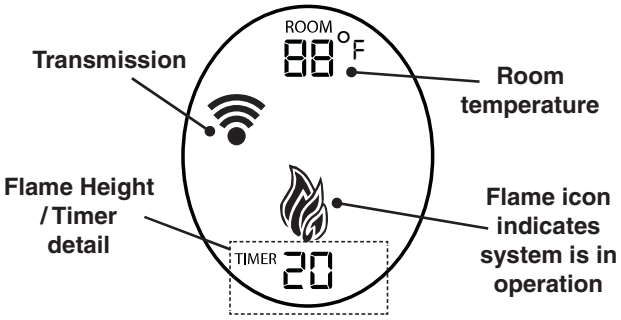

Fig. 13-2 Remote display detail

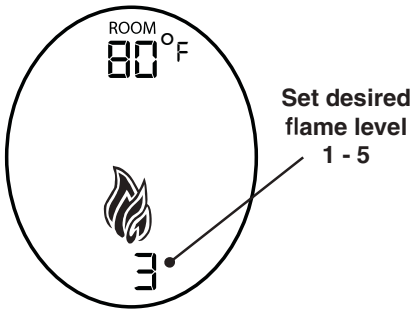

Fig. 13-3 Flame height detail

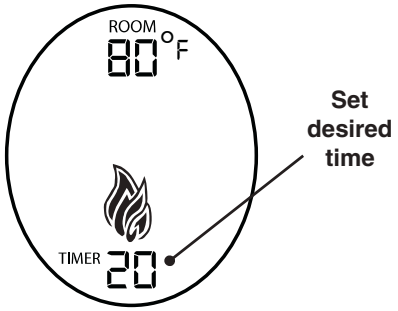

Fig. 13-4 Timer detail

TROUBLESHOOTING

PROBLEM	CAUSE	SOLUTION
1. Pilot will not light	a. Obstruction in pilot gas supply or pilot gas-supply line is kinked b. Inadequate gas supply c. Air in line d. Gas is shut off on control valve (3V models only)	a. Clear out obstruction. Replace pilot gas-supply line if kinked b. Have gas pressure checked by installer or gas supplier c. Air should clear; attempt to relight d. Turn on valve (3V models only)
2. No spark at pilot	a. Loose wires b. Appliance not receiving power c. Faulty switch or remote (if equipped)	a. Check all wires are securely in place b. Check remote batteries / power supply c. Replace the switch or remote system as appropriate
3. Pilot lights, but main burner will not	a. Loose or broken connector wires b. Defective valve	a. Check and replace if necessary b. Replace valve
4. Log set not burning properly	a. Low flame/uneven flame	a. Check for low gas pressure; should have operating pressures of 7" w.c. for natural gas, 11" w.c. for propane at manifold b. Burner should be filled completely with sand or vermiculite
5. Log set shuts down during operation	a. Glass doors closed, causing excessive heat buildup b. Pilot electrode not properly set to pilot location c. Heat shield not in place	a. Open glass doors b. See INSTALL THE PILOT ASSEMBLY TO THE BURNER section c. Place heat shield over valve. Be sure the solid black face of the shield is between the valve and the burner
6. Intermittent ignitor spark during use (main burner has been burning for well over a minute).	a. Embers or sand covering pilot assembly	a. Clear all foreign material from around the pilot assembly
7. Remote control not functioning	a. Appliance not receiving power b. No gas flow to the valve c. Remote too far from receiver d. Spark ignition interfering with remote signal	a. Check remote batteries / power supply b. Check gas supply to valve c. Move remote closer to receiver d. Move remote closer to receiver

Periodically inspect the pilot assembly and valve controls and maintain them free of obstruction or debris. If the pilot flame is not blue with possibly yellow tips and does not impinge on the electrodes or if the pilot does not stay lit, contact a qualified professional service technician to service the pilot system.

SYNCING THE REMOTE

The ignition module pack has a sync button that is located next to the LED light.

Move the 3-position switch (on the heat shield) down to the **REMOTE** position. Then press upward on the sync button and hold. One beep will be heard. While continuing to hold, press and hold the "ON" button on the remote transmitter, until a double beep is heard. Follow the LIGHTING INSTRUCTIONS to test remote funcionality.

Refer to the TROUBLE CODES table for a guide if the ignition module pack is flashing the red lights.

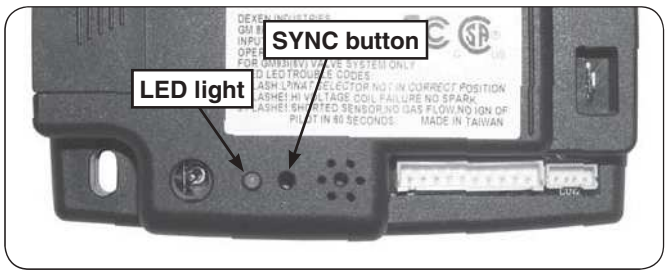

RED LED TROUBLE CODES	
1 Flash	Nat/LP selector not in correct position
2 Flashes	HI voltage coil failure, no spark
3 Flashes	Shorted sensor, no gas flow, no ignition of pilot in 60 seconds

Detail A

Electrode (A)

When adjusting the spark electrode (if necessary); NEVER adjust the electrode by bending the wire. ALWAYS adjust the electrode by loosening the retainer nut(s), then adjust accordingly.

The minimum gap between the spark electrode/ sensor electrode and the pilot flame hood is $^1/_8$". The maximum is $^5/_{32}$".

If the electrode ceramic is loose in the threaded barrel; the pilot assembly must be replaced.

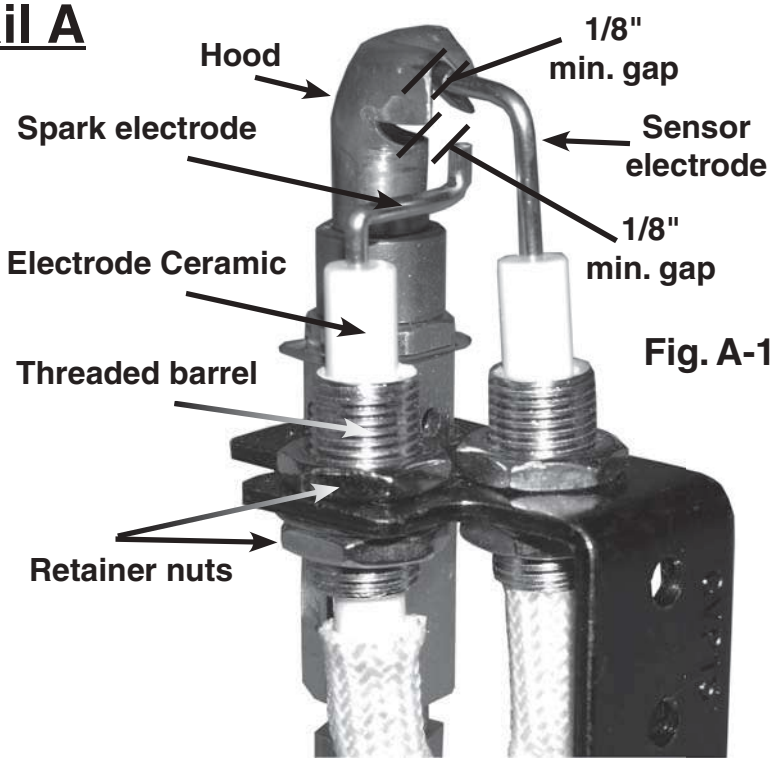

Fig. A-1

Detail B

Terminal Connections (B)

All of the connections on the control module must be properly attached. If the spade terminals are loose; inspect to ensure they correctly appear as detailed below. Use needle nose pliers to clamp down on the center/sides of the terminals if needed (to provide a tight fit.)

Spade Terminal Detail

CORRECT

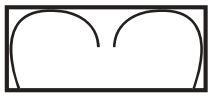

INCORRECT

(Fig. B-1)

Ensure that spade terminals (S and I) are attached securely

Ensure that multi-wire connector is properly locked in place

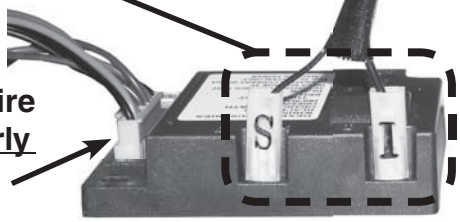

Control Module (DESIGN MAY VARY)

(Fig. B-2)

(Fig. B-3)

Detail C

(Fig. C-1)

DO NOT bundle tightly together as shown

Assembly Wires (C)

DO NOT bundle the excess pilot assembly wires tightly together as this can reduce the intensity of the spark.

WARRANTY

PETERSON VENTED DECORATIVE GAS APPLIANCE
LIMITED WARRANTY

Robert H. Peterson Co. ("RHP") warrants your Real Fyre® vented decorative gas appliance to be free from defects in material and workmanship.

Peterson vented ceramic refractory gas logs are warranted for **as long as you own them (lifetime)**.

Peterson vented burner assemblies are **WARRANTED for TEN (10) YEARS**. Peterson vented outdoor stainless-steel burner assemblies are warranted for **FIVE (5) YEARS**.

Peterson glass, gems, nuggets, and fiber-ceramic blend gas logs are warranted for **FIVE (5) YEARS**.

SPK-26 controls are warranted for **THREE (3) YEARS**.

APK-17 controls (including -17 valve) are warranted for **TWO (2) YEARS**.

All other Peterson valves, pilots, and controls are warranted for **ONE (1) YEAR (excluding batteries).**

A COPY OF YOUR SALES SLIP FOR PROOF OF PURCHASE IS REQUIRED

This warranty applies to the original purchaser for products which are installed in the United States or Canada and which are operated and maintained as intended for single family residential usage. This warranty is valid only with proof of purchase, shall commence on the date of purchase, and shall terminate (both as to original and any replacement products) on the anniversary date of the original purchase of the product stated on the above schedules.

This warranty covers defects in material and workmanship. This warranty **does not** cover parts which become defective as a result of negligence, misuse, use not in compliance with the Owner's Manual/Installation Instructions, accidental damage, improper handling, improper storage, improper installation, lack of required routine maintenance (as specified in the Owner's Manual/Installation Instructions), electrical damage, local gas impurities or failure to protect against combustibles. Product must be installed (and gas must be connected) as specified in the Owner's Manual/Installation Instructions by a **qualified professional installer**. Modifications to products which are not specifically authorized will void this warranty. Accessories, parts, valves, remotes, etc. when used must be Peterson products or this warranty is void. Warrantied items will be repaired or replaced at Peterson's sole discretion. This warranty **does not** apply to rust, corrosion, oxidation, or discoloration unless the affected part becomes inoperable.

This warranty **does not** cover labor or labor related charges, except as provided by separate specific written programs from the Peterson Co. All repair work must be performed by a qualified professional service person and requires prior approval of Peterson.

Peterson may require the defective product or part to be returned to the factory to determine the cause of failure. Peterson will pay freight charges if the product or part is determined to be defective. This warranty does not cover breakage in shipment from our (Independent) distributor to its customer if the damage is determined to have occurred during that shipment.

This warranty specifically excludes liability for **indirect**, **incidental**, or consequential damages. Some states and provinces do not allow the exclusion or limitation of incidental or consequential damages, so the above exclusion may not apply to you. This warranty gives you specified legal rights, and you may have other rights that vary from state to state or province.

For additional information regarding this warranty, or to place a warranty claim, contact the R. H. Peterson dealer where the product was purchased.

TO REGISTER YOUR PRODUCT ONLINE GO TO: WWW.RHPETERSON.COM, AND CLICK ON PRODUCT REGISTRATION. THANK YOU FOR YOUR PURCHASE.

Quality Check		**Date:**_____		
Leak Test: _____	**Burn Test:** _____		**Gas Type:**	**Nat. / L.P.**
Inspector: _____				