GrillandPatio.com | 866-688-4647

RH PETERSON CO.

realfyre PREMIUM GAS LOGS

OWNER'S MANUAL

SAFETY PILOT KITS for PETERSON GAS LOG SETS

For Natural or Propane Gas

SPK-20 Knob control

INSTALLER
Please leave these instructions with the consumer.

CONSUMER
Please retain for future reference.

SPK-21 Steel rod control

SPK-20 and SPK-21 SAFETY PILOT KIT

WARNING

If the information in this manual is not followed exactly, a fire or explosion may result, causing property damage, personal injury, or loss of life.

Do not store or use gasoline or other flammable vapors and liquids in the vicinity of this or any other appliance.

FOR YOUR SAFETY

If you smell gas:

1. Extinguish any open flame; open windows.
2. Don't use electrical switches or the phone.
3. Immediately call the gas supplier from a neighbor's phone.
4. If you cannot reach the gas supplier, call the fire department.

Installation and service must be performed by a qualified, professional installer, service agency, or the gas supplier.

INSTALLER & CONSUMER
These instructions **MUST** be retained with this appliance.

Important: Read these instructions carefully before starting the installation of the log set and control.

THE PETERSON LOG SET IS TO BE BURNED ONLY IN A FULLY VENTED, NONCOMBUSTIBLE FIREPLACE WITH DAMPER AND CHIMNEY FREE OF ANY OBSTRUCTIONS. THE FIREPLACE MUST BE DESIGNED AND APPROVED TO BURN WOOD. Like burning natural firewood, the Peterson log set is designed to burn with a yellow smoky flame. For this reason, it must be adequately vented. *Be sure the fireplace damper is fully open when you burn the gas log set.* The smallest dimension of the chimney flue must be at least 8". If it is smaller, DO NOT USE A PETERSON LOG SET. If fumes from the burner emerge into the room when the damper is fully open, creating a smell like a smoldering oil lamp, it indicates that the fireplace draft is defective. Check chimney flue for obstructions. DO NOT OPERATE LOGS UNTIL THE FIREPLACE DRAFT IS CORRECTED. Check with the dealer or installer. Do not use firewood with this unit.

This safety pilot system contains a control certified by C.S.A.

ROBERT H. PETERSON CO. • 14724 East Proctor Avenue • City of Industry, CA 91746

IMPORTANT INFORMATION

CHECK TO BE SURE THAT THE SAFETY PILOT HAS BEEN ASSEMBLED FOR THE PROPER GAS. (Reference FOR PROPANE GAS section on page 3.)

The installation, including provisions for combustion and ventilation air, must conform with local codes, or, in the absence of local codes, with the National Fuel Gas Code, ANSI Z223.1 (latest edition).

This appliance and its individual shutoff valve must be disconnected from the gas supply piping system when testing at pressures that exceed 1/2 psig. This is accomplished by closing the gas supply line valve.

This appliance must be isolated from the gas supply piping system by closing its individual manual shutoff valve during any testing of the gas supply system at test pressures up to and including 1/2 psig.

WHEN GLASS FIREPLACE ENCLOSURES (DOORS) ARE USED, OPERATE THE GAS LOG SET WITH THE GLASS DOORS OPEN; BOTH SIDES IF FIREPLACE IS SEE-THRU TYPE.

PARTS LIST

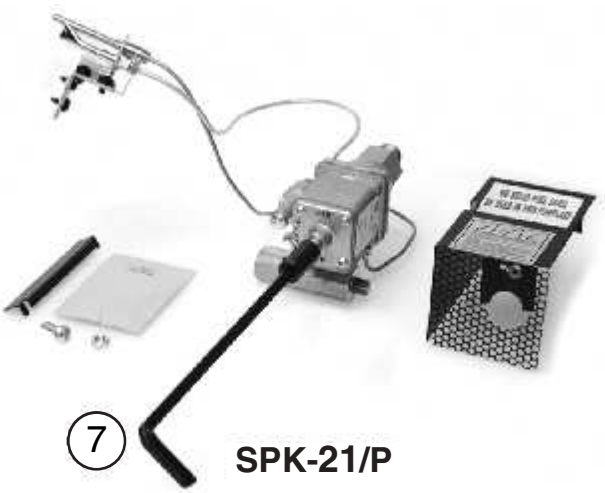

SPK-21/P

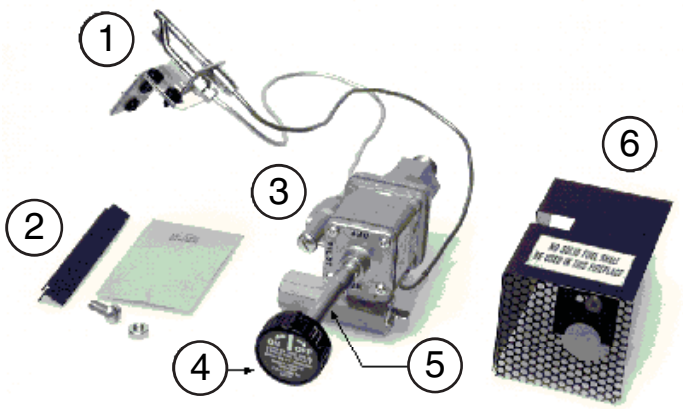

SPK-20/P

Item No.	Part No.	Description
1.	PAC-1 NAT	Pilot assembly, complete
or		
	PAC-1 LP	
2.	SH-1	Flame diverter bracket
3.	SV-12	Safety control valve
4.		SPK-20 knob
5.	EH-2	Extension handle
6.	HS-9	Heatshield
7.	EH-1	SPK-21 extension handle

HOW TO ASSEMBLE THE SAFETY PILOT KIT

This safety pilot kit must be installed by a qualified professional. Instructions must be followed carefully when installing to ensure proper performance and full benefit from the gas log set and safety pilot kit.

These instructions must be used as a supplement to the instructions supplied with the Peterson gas log set. Follow the gas log set instructions and make adjustments as appropriate for the addition of a safety pilot kit. Use gas pipe sealing compound that is resistant to all gases, or Teflon tape, and apply to all male pipe connections. Make sure that all connections are tight and do not leak.

FOR PROPANE GAS

The safety pilot kit is shipped with a natural gas orifice installed unless the safety pilot kit was received in the same box as the propane burner. To change from natural to propane gas, remove the pilot gas supply line at the pilot end. Replace the natural gas orifice with the propane gas orifice contained in the yellow envelope marked "L.P.-GAS", provided in the bag. Reattach the pilot gas supply line to pilot (Fig. 3-1).

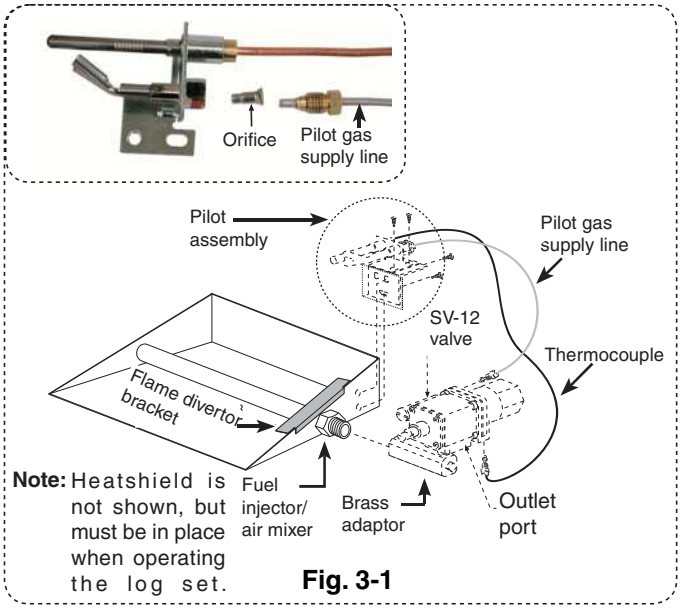

Fig. 3-1

STEP 1: CONNECTING THE SAFETY VALVE TO THE BURNER

A. Remove the heatshield, extension handle, and knob, if required.

B. Screw the brass adapter to the fuel injector or air mixer on the burner (Fig. 3-1).

FOR LEFT-SIDED INSTALLATION:

A. Make sure the fuel injector/air mixer and burner cap are reversed so the the fuel injector is on the left side of the burner and the cap is on the right.

B. Turn the brass adapter 180 degrees on the safety valve so the opening is to the right and then mirror illustrations for left-sided installation.

C. Reconfigure heatshield to protect the valve body.

STEP 2: INSTALLING THE FLAME DIVERTER BRACKET

Purpose

The flame diverter bracket, when properly installed onto Peterson G4, GX4, VG4, and P series burner pans equipped with a safety control system, will promote quicker ignition of the Peterson gas log set and protect the safety control system from overheating.

A. Install the flame diverter bracket before installing the pilot assembly.

B. Place flame diverter bracket over the side edge of the burner pan where the Peterson safety control system pilot bracket will be attached. Bracket should be placed approximately 1 1/4" from the back of burner pan (Fig. 3-2, 3-3, & 3-4).

C. Tap bracket lightly with hammer to secure in place.

CAUTION: Be careful not to kink the pilot gas supply tube or thermocouple.

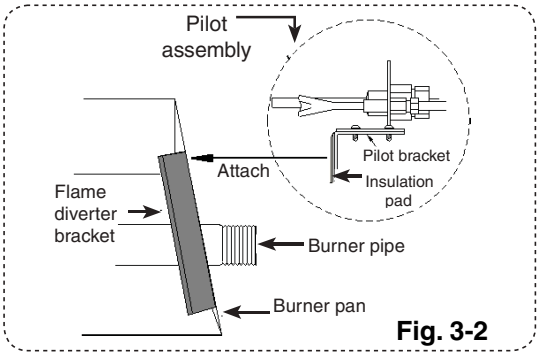

Fig. 3-2

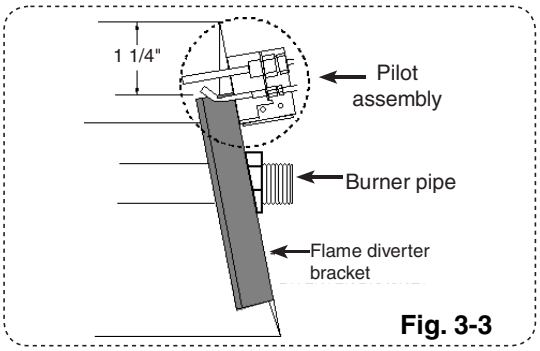

Fig. 3-3

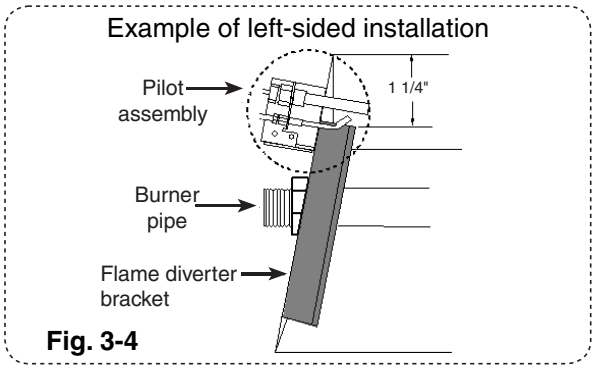

Fig. 3-4

HOW TO ASSEMBLE THE SAFETY PILOT KIT (Cont.)

CAUTION: Do not get granules into the pilot burner.

CAUTION: Be careful not to kink pilot gas supply line or thermocouple.

STEP 3: INSTALL THE PILOT ASSEMBLY TO THE BURNER

Refer to the PARTS LIST when following these instructions.

Glowing ember- G4, GX4 & VG4 series

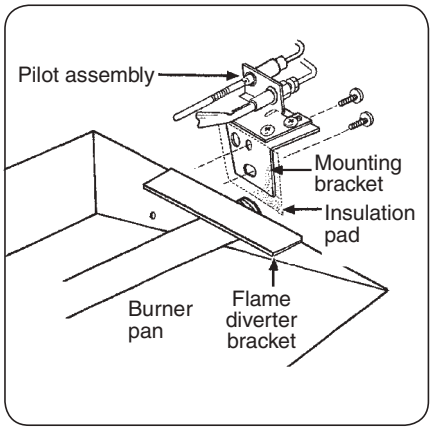

Place the insulating pad between the mounting bracket and the pan. Insert the screws through the pilot bracket and the holes at the end of the pan, as illustrated above.

Place the remainder of the insulation pad between the top portion of the mounting bracket and pilot assembly and fasten in place with the screws provided.

Carefully bend the thermocouple lead and the pilot gas supply line so the pilot assembly is positioned as illustrated above.

Front flame- F series

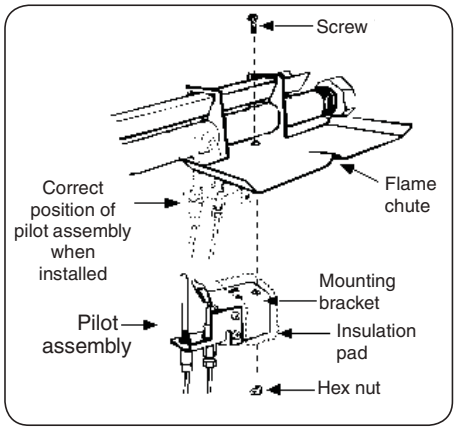

Place the insulating pad between the mounting bracket and the pilot assembly. Fasten with the screws provided.

Place the remainder of the insulation pad between the mounting bracket and the flame chute. Insert the screw (provided in bag) through the hole in the first flame chute (nearest the control) and attach the pilot assembly to the burner in the position as illustrated. Attach the nut (provided in bag) and tighten.

Flame pan - P series

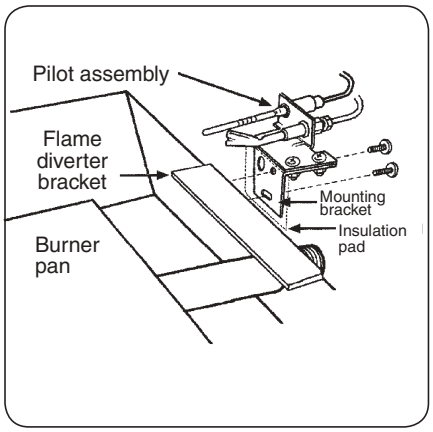

Place the insulating pad between the mounting bracket and the pan. Insert the screws through the pilot bracket and the holes at the end of the pan, as illustrated above.

Place the remainder of the insulation pad between the top portion of the mounting bracket and pilot assembly and fasten in place with the screws provided.

Carefully bend the thermocouple lead and the pilot gas supply line so the pilot assembly is positioned as illustrated above.

STEP 4: ATTACHING THE HEATSHIELD TO THE SAFETY CONTROL VALVE

A. The heatshield is assembled so that it can be placed with the shield's closed side between the valve and the burner.

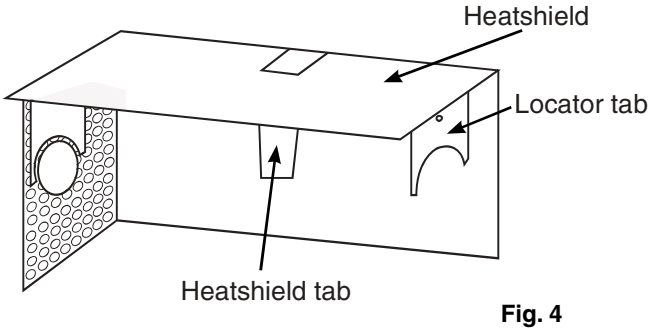

Fig. 4

B. If using an SPK-20, pull off the control knob.

C. Place the assembled heatshield over the safety control valve by inserting the valve stem through the hole of the heatshield face so the locator tabs rest on the valve system sleeve at the front of the valve and on the nipple in the rear of the valve. The heatshield tab will insert against the valve body, keeping the heatshield in place.

D. If using an SPK-21, attach the extension handle (EH-1) onto the valve stem and tighten the screw clamp on the handle.

E. If using an SPK-20, attach the knob onto the extension handle (EH-2)and attach to the valve stem.

SPK-20 • SPK-21 OPERATING INSTRUCTIONS

We recommend that before you install the log set you familiarize yourself with the control valve layout. This will help you to be confident operating the log set when fully installed (see figures below for typical control positions).

HOW TO LIGHT THE PILOT

To light the pilot from the **PILOT** position (Fig. 5-2), push in slightly on the knob or rod handle and turn to the **OFF** position (Fig. 5-1). Wait five minutes, then turn the knob or rod handle to the **PILOT** position (Fig. 5-2). Push the knob or rod handle fully in and at the same time place a long lighted match at the pilot burner. The pilot should light. Hold the knob or rod handle in approximately 60 seconds. If the pilot does not stay lit, turn to the full **OFF** position (Fig. 5-1). Wait five minutes and repeat the LIGHTING INSTRUCTIONS.

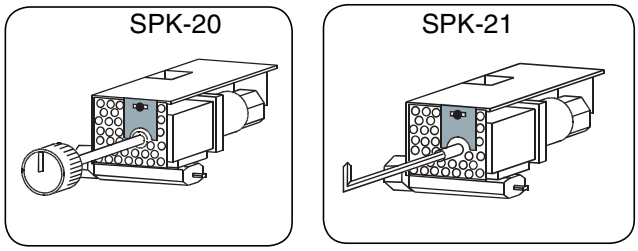

Fig. 5-1
OFF position
Burner off - Pilot off

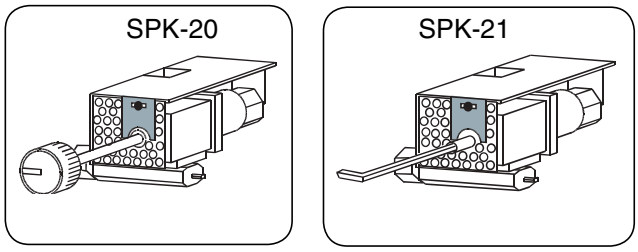

Fig. 5-2
PILOT position
Burner off - Pilot on

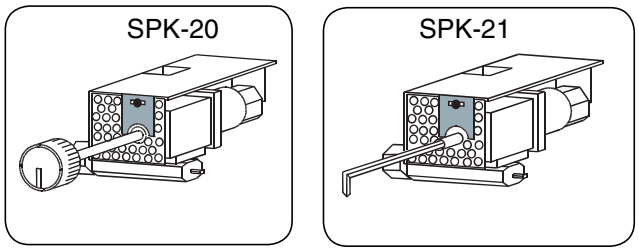

Fig. 5-3
ON position
Burner on - Pilot on

HOW TO TURN THE GAS LOG SET ON AND OFF USING THE SAFETY PILOT KIT

BE SURE THE DAMPER IS FULLY OPEN WHEN OPERATING THE GAS LOG SET.

TO TURN ON THE GAS LOG SET FROM THE **PILOT** POSITION when pilot is lit (Fig. 5-2): Turn the knob or handle 90° counter-clockwise to the **ON** position (Fig. 5-3).

TO TURN OFF THE GAS LOG SET FROM THE **ON** POSITION (Fig. 5-3): Turn the knob or handle 90° clockwise to the **PILOT** position (Fig. 5-2).

TO TURN OFF THE GAS LOG SET AND THE PILOT FROM THE **PILOT** POSITION (Fig. 5-2): Push in slightly on the knob or rod handle and turn 90° clockwise to the **OFF** position (Fig. 5-1).

FOR IMPROVED PILOT OPERATION

PILOT ADJUSTMENT

Should the pilot require adjustment, the following steps should be taken: With the pilot lit and the control knob in the **PILOT** position, carefully remove the cap screw located on the SV-12 valve (Fig. 5-4). Using a long, narrow screwdriver, turn the pilot adjustment screw slowly clockwise to reduce the pilot flame or counter-clockwise to increase the flame. The adjustment screw can be turned so that the pilot flame is completely extinguished. Some tightening of the screw may occur during adjustment; this is normal. The pilot flame should be a soft blue color with slightly yellow tipping that encircles the thermocouple tip.

Reassemble the cap screw and the gasket to valve body, ensuring that the cap screw and the gasket are firmly seated on the valve body. Turn the control knob to the **ON** position to assure proper ignition of the log burner.

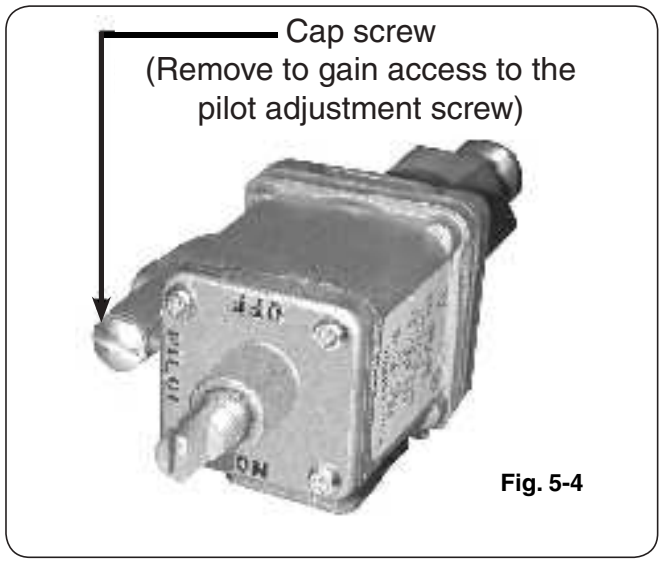

Fig. 5-4

NOTES PAGE

Please use this page to record any information that you may want to have at hand.

TROUBLESHOOTING THE SPK-20 AND SPK-21 SAFETY PILOT KIT

PROBLEM	CAUSE	SOLUTION
1. Pilot will not light	a. Obstruction in pilot gas supply/ pilot gas supply line is kinked b. Inadequate gas supply c. Pilot out of adjustment d. Air in line	a. Clear out obstruction. Replace pilot gas supply line if kinked. b. Have gas pressure checked by installer or gas supplier. c. Adjust pilot (see page 5). d. Air should clear, attempt to relight.
2. Pilot will not stay lit after releasing knob	a. Pilot flame out of adjustment (tip of flame should encircle tip of thermocouple) b. Thermocouple (SPK) either too tight or too loose c. Bad thermocouple	a. Adjust pilot (see page 5). b. Thermocouple should be finger tight and then 1/8" turn with a wrench. c. Replace thermocouple.
3. Log set extinguishes a few minutes after lighting	a. Inadequate gas supply causes pilot flame to reduce after burner lights	a. Using pilot adjustment, increase gas to pilot. Pilot flame must be in contact with the thermocouple tip.
4. Log set extinguishes after burning for some time (approximately 10 minutes to 1 hour)	a. Thermocouple has overheated; glass doors are closed b. Thermocouple has overheated; insulation pad is not in place c. Thermocouple has overheated; burner flames are heating the thermocouple cold junction	a. Be sure glass doors are open during operation. b. Be sure that the insulation pad is in place between the burner pan and the pilot bracket. c. Be sure the pilot assembly and the flame diverter are in their proper position. Rearrange logs so that flame is not deflected to the thermocouple.
5. Pilot will light without holding in knob or gas flows to burner without pilot being lit	a. Valve is installed backward	a. Reinstall valve with inlet port attached to gas supply and outlet port attached to burner.

IMPORTANT

For all valves, the air **MUST** be purged from the gas line before the pilot will light properly. The time taken to do this will depend on the length of gas line from the meter to the unit and the length of time since the unit or gas line was last used (in the case of non-use during warm weather for example). It may take from 3-15 minutes before all the air is purged and the pilot will light properly. This is done using the method for lighting the pilot, but holding in the control valve for a longer period. Follow the LIGHTING INSTRUCTIONS in this manual for your specific valve type.

WARRANTY

PETERSON VENTED GAS LOG SETS
LIMITED WARRANTY

All Peterson gas logs are **WARRANTED for as long as you own them (lifetime).**

All Peterson burner assemblies are **WARRANTED for TEN (10) YEARS.**

SPK-26 controls are covered by a **THREE (3) YEAR "All Parts" Warranty.**

All other Peterson valves, pilots, and controls are covered by a **ONE (1) YEAR Limited Warranty (excluding batteries).**

PLEASE KEEP A COPY OF YOUR SALES SLIP FOR PROOF OF PURCHASE

This warranty applies to the original purchaser and to single family residential use only. It commences from date of purchase, and is valid only with proof of purchase.

This warranty does not cover parts becoming defective through misuse, accidental damage, electrical damage, improper handling, storage, and/or installation. Product must be installed (and gas must be connected) as specified in the instructions or operator's manual, by a **qualified professional installer.** Accessories, parts, valves, remotes, etc., when used must be Peterson Co. product.

This warranty **does not** apply to rust, corrosion, oxidation, or discoloration, unless the affected component becomes inoperable. It **does not** cover labor or labor-related charges.

This warranty specifically excludes liability for **indirect, incidental,** or consequential damages. Some states do not allow the exclusion or limitation of incidental or consequential damages, so the above exclusion may not apply to you. This warranty gives you specified legal rights, and you may have other rights that may vary from state to state.

For additional information regarding this warranty, or to place a warranty claim, contact the R.H. Peterson dealer where the product was purchased.

TO REGISTER YOUR PRODUCT ONLINE GO TO: WWW.RHPETERSON.COM, AND CLICK ON PRODUCT REGISTRATION. THANK YOU FOR YOUR PURCHASE.

Quality Check **Date:**_____

Burner Orifices	**Nat.**	**L.P.**	**Leak Test:**	_____	**Model#:**	_____
Main:	_____	_____	**Burn Test:**	_____	**Serial#:**	_____
Other:	_____	_____	**Gas Type:**	**Nat. / L.P.**	**Air Shutter:**	_____
					Inspector:	_____

Robert H. Peterson Co. • 14724 East Proctor Avenue • City of Industry, CA 91746