GrillandPatio.com | 866-688-4647

FIREMAGIC®
CHOICE

STAND-ALONE OUTDOOR GAS GRILLS

C430s & C540s

INSTALLATION INSTRUCTIONS AND OWNER'S MANUAL

INSTALLER: Leave these instructions with consumer.
CONSUMER: Retain for future reference.

C430s shown

IMPORTANT: READ THESE INSTRUCTIONS CAREFULLY BEFORE STARTING INSTALLATION OR USE.

SAFETY AND WARNING CODES

⚠ DANGER:

IF YOU SMELL GAS:

1. Shut off the gas to the appliance.
2. Extinguish any open flame.
3. Open lid.
4. If odor continues, keep away from the appliance and ***immediately*** call your gas supplier or the fire department.

⚠ WARNING:

1. Do not store or use gasoline or other flammable vapors and liquids in the vicinity of this or any other appliance.
2. An LP cylinder not connected for use shall not be stored in the vicinity of this or any other appliance.

⚠WARNING:

Improper installation, adjustment, alteration, service, or maintenance can cause injury or property damage. For proper installation, refer to the installation instructions. For assistance or additional information, consult a qualified professional installer, service agency, or the gas supplier.

CODE AND SUPPLY REQUIREMENTS: This grill must be installed in accordance with local codes and ordinances, or, in the absence of local codes, with either the latest *National Fuel Gas Code (ANSI Z223.1/NFPA 54),* and *Natural Gas and Propane Storage and Handling Installation Code (CSA-B149.1).*

This appliance and its dedicated manual shutoff valve must be disconnected from the gas-supply piping system when testing the system at pressures in excess of ½ psig (3.5 kPa).

This appliance must be isolated from the gas-supply piping system by closing its dedicated manual shutoff valve during any pressure testing of the gas-supply system at pressures up to and including ½ psig (3.5 kPa).

All electrical outlets in the vicinity of the grill must be properly grounded in accordance with local codes, or, in the absence of local codes, with the *National Electrical Code, ANSI/NFPA 70,* or the *Canadian Electrical Code, CSA C22.1,* whichever is applicable.

Keep all electrical-supply cords and fuel-supply hoses away from any heated surface.

Proper operation of your grill requires prompt and periodic maintenance. See the CARE & CLEANING section for details.

PFS C US 11-093

Certified to: **ANSI Z21.58b-2012**
CSA 1.6b-2012

INSTALLATION INSTRUCTIONS ET MANUEL DU PROPRIÉTAIRE

GRIL EXTÉRIEUR DE GAZ DU PORTATIF

IMPORTANT: LISEZ CES INSTRUCTIONS SOIGNEUSEMENT AVANT DE COMMENCER L'INSTALLATION OU L'UTILISATION

SÛRETÉ ET CODES D'AVERTISSEMENT

⚠ DANGER:

SI VOUS SENTEZ LE GAZ :

1. Coupez le gaz à l'appareil.
2. Éteignez-vous n'importe quelle flamme nue.
3. Ouvrez le couvercle si équipé d'un four.
4. Si l'odeur continue, gardez loin de l'appareil et appelez immédiatement votre département de fournisseur ou de feu de gaz.

CONDITIONS DE CODE ET D'APPROVISIONNEMENT: Ce gril doit être installé selon des codes et des ordonnances locaux, ou, en l'absence des codes locaux, avec l'un ou l'autre le plus défunt *Code national de gaz de carburant* (norme ANSI Z223.1/NFPA 54), et *Stockage de gaz naturel et de propane et manipulation du code d'installation* (CSA-B149.1).

Cet appareil et ses différents robinets d'isolement doivent être démontés du gaz-fournissent le système sifflant en examinant le système aux pressions au-dessus du ½ psig (kPa 3.5).

Cet appareil doit être isolé dans gaz-fournissent le système sifflant par fermeture que ses différents robinets d'isolement manuels pendant tous les essais sous pression du gaz-fournissent le système aux pressions jusques et y compris le ½ psig (kPa 3.5).

- Ce gril est pour ultilisation à l'extérieur seulement. Si l'appareil est entreposé à l'intérieur, enlever les bouteilles et les laisser à l'extérieur.
- Ne pas ranger le gril immédiatement aprés l'avoir utilisé. le laisser refroidir avant de le déplacer ou de la ranger. Le non respect de cette mesure de sécurité pourrait entraîner un incendie causant des dommages à la propriété, des blessures ou la mort.
- Ne pas utiliser cet appareil sous une surface combustible.
- Ne pas utiliser cet appareil sous un auvent. Le non respect de cette mesure de sécurité pourrait entraîner un incendie ou des blessures.
- Dégagement minimal entre les parois latérales et l'arriére de l'appareil et la construction combustible (45.7 cm à partir des parois latérales et 45.7cm à partir de l'arriére).
- Le régulareur de pression de gaz prévu avec cet appareil de cuisson à gaz pour l'extérieur doit être utilisé. Ce régulateur est réglé pour une pression de sortie de 5 pouces de colonne de l'eau pour le gaz naturel, et 10 pouces pour le propane.
- LE RÉGULATEUR INCLUS D'APPAREILS EST ÉVALUÉ POUR LE MAXIMUM DE 1/2 (LIVRES PAR POUCE CARRÉ). SI VOTRE OFFRE DE GAZ EST 1/2 PLUS GRAND QUE (LIVRES PAR POUCE CARRÉ), UN RÉGULATEUR ADDITIONNEL DOIT ÊTRE INSTALLÉ AVANT LE GRIL. VOIR LA SECTION DE CONDITIONS

⚠ AVERTISSEMENT:

1. Ne stockez pas ou n'employez pas l'essence ou d'autres vapeurs et liquides inflammables à proximité de ceci ou d'aucun autre appareil.
2. Un cylindre de propane non relié pour l'usage ne sera pas stocké à proximité de ceci ou d'aucun autre appareil.

⚠ AVERTISSEMENT:

L'installation inexacte, l'ajustement, le changement, le service, ou l'entretien peuvent causer des dommages ou des dégats matériels. Référez-vous à ce manuel. Pour l'aide ou l'information additionnelle, consultez un installateur professionnel qualifié, l'agence de service, ou le fournisseur de gaz.

Toutes les sorties électriques à proximité du gril doivent être correctement fondues selon des codes locaux, ou en l'absence de local code, avec le code électrique national, ANSI/NFPA 70, ou le code électrique canadien, CSA C22.1, celui qui est applicable.

Maintenez tout électrique-fournissent des cordes et carburant-fournissent des tuyaux partis de n'importe quelle surface de chauffage.

D'OFFRE DE GAZ POUR LA PRESSION APPROPRIÉE D'OFFRE DE GAZ.

- Ne couvrez jamais la surface entière de cuisine ou de gril de gauffreuses ou de casseroles. La surchauffe se produira et les brûleurs ne seront pas très performants quand la chaleur de combustion est emprisonnée au-dessous de la surface à cuire.
- Ne pulvérisez jamais l'eau sur une unité chaude de gaz, comme ceci peut endommager des composants de porcelaine ou de fer de fonte.
- Une fuite de GPL peut causer une incendie ou une explosion si enflammée entraînant des blessures corporelles graves ou la mort.
- Communiquez avec le fournisseur de GPL pour les réparations ou pour disposer de qules bouteille ou du GPL non utilisé.

Certifié à la norme: ANSI Z21.58b-2012 / CSA 1.6b-2012

INSTALLATEUR : Laissez ces instructions avec le consommateur.
CONSOMMATEUR : Maintenez pour la future référence.

CONTENTS

GETTING STARTED

REPLACEMENT PARTS LIST 4
GRILL NOTES PAGE 6
GRILL MAINTENANCE AND SAFETY INFORMATION 7
MODEL SPECIFICATIONS 8
STAND-ALONE GRILL DIMENSIONS TABLE 8
INSTALLATION REQUIREMENTS 10
SIDE AND REAR WALL CLEARANCES 10
ENSURE PROPER COMBUSTION AIR AND COOLING AIRFLOW 11
PROPANE SAFETY INFORMATION 12
WARNING 12
INSTALLATION SAFETY GUIDELINES 12
OPERATING THE UNIT SAFELY AND CORRECTLY 12
SAFE USE & MAINTENANCE OF PROPANE GAS CYLINDERS 13

INSTALLATION

INSTALLATION 15
LOCATION PREPARATION 15
WHEELS AND CASTERS 15
CONNECT THE GAS SUPPLY 15
INSTALL THE FLAVOR GRIDS 16
RIGID SHELF INSTALLATION 17
IDENTIFICATION OF GRILL CONTROLS 18

USE, CARE, & SERVICE

LIGHTING (IGNITION) INSTRUCTIONS 19
ELECTRONIC LIGHTING 19
MANUAL LIGHTING 19
SHUTTING OFF THE UNIT 19
ACCESSORIES 21
FIRE MAGIC® DRIP TRAY 22
CARE & CLEANING 23
CONVERTING THE GAS TYPE 24
BURNER AIR SHUTTER ADJUSTMENT 25
CONTROL PANEL REMOVAL 26
TROUBLESHOOTING 27
WARRANTY 28

REPLACEMENT PARTS LIST

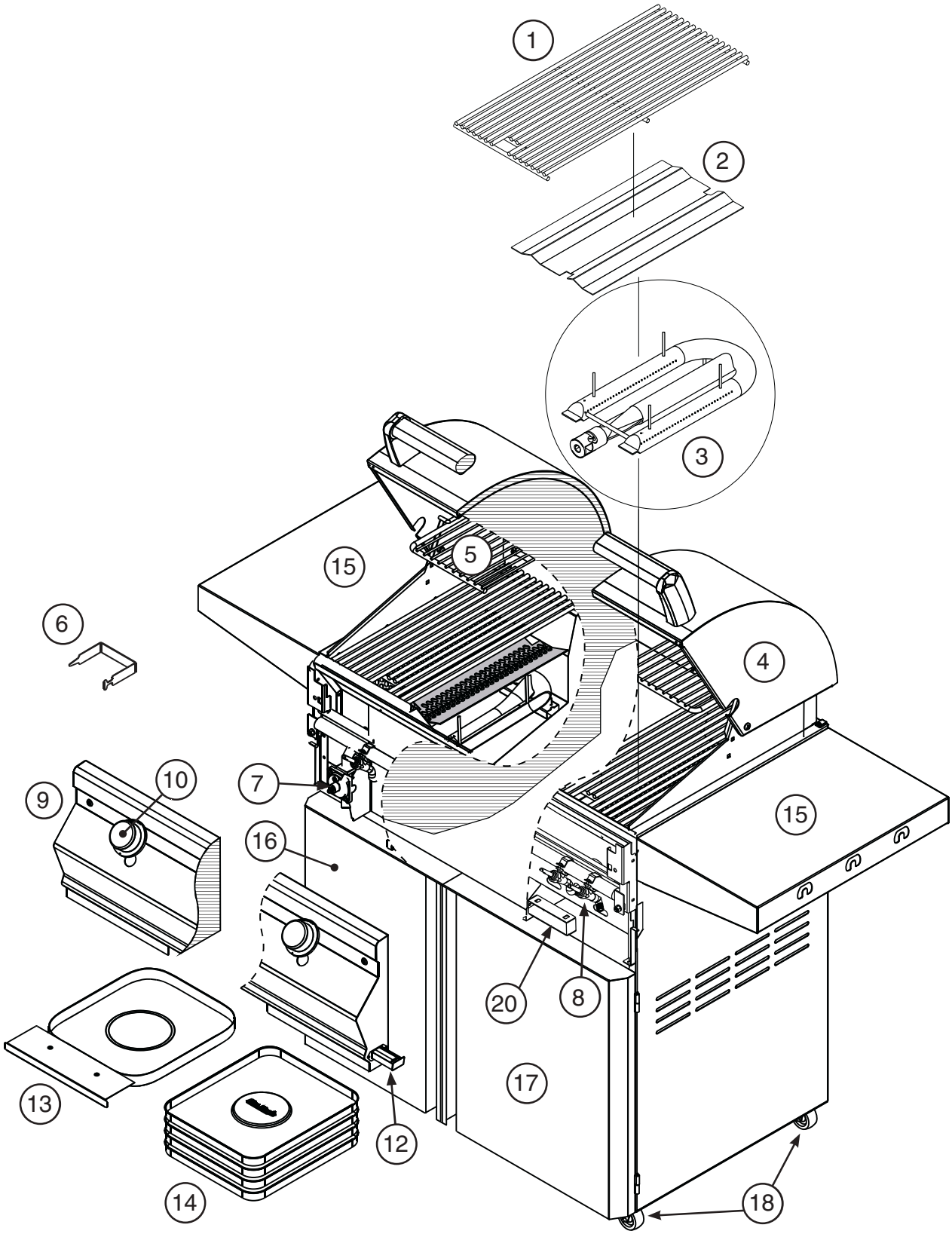

To order replacement parts, contact your local Fire Magic® dealer.

REPLACEMENT PARTS LIST (cont.)

Item	Description	C430s Part No.	C430s Qty.	C540s Part No.	C540s Qty.
1.	Stainless cooking grid (set of 2 or 3)	23542-S-2	1	23543-S-3	1
2.	Flavor grid (set of 2 or 3)	3063-S-2	1	3064-S-3	1
3.	Main burner	3042-60	2	3042-60	3
4.	Oven lid	23729-54	1	23733-54	1
5.	Warming rack*	3672S-M	1	3673S-M	1
6.	Grid lifter	3519	1	3519	1
7.	Convertible regulator	PR-4	1	PR-4	1
8.	Valve manifold	24130-28	1	24170-28	1
9.	Control panel assembly	24130-36	1	24170-36	1
10.	Control knob	3015	2	3015	3
11.	Thermometer †	23305	1	23305	1
12.	Ignitor battery holder assy (9v)	24180-38	1	24180-38	1
13.	Drip tray	3089	1	3089	1
14.	Drip tray liner (set of 4)	3557	1	3557	1
15.	Rigid shelf	24-C-01	2	24-C-01	2
16.	Door (left)	24330-29L	1	24370-29L	1
17.	Door (right)	24330-29R	1	24370-29R	1
18.	Caster kit (set of 4)	24-C-35	1	24-C-35	1
19.	Electrode & collector box assy †	3199-45	2	3199-45	3
20.	Ignitor module	3199-51	1	3199-44	1
21.	Natural gas orifice(s) †	3001-43-2	1	3001-45-3	1
22.	Propane gas orifice(s) †	3001-54-2	1	3001-55-3	1
23.	Propane regulator / hose assy †	5110-07	1	5110-07	1
or	Natural Gas QD hose †	5110-03	1	5110-03	1
24.	Fire Magic® cookbook †	3595	1	3595	1

* If equipped
† Not shown

GRILL NOTES PAGE

Please use this page to record any information about your grill that you may want to have at hand.

GRILL MAINTENANCE AND SAFETY INFORMATION

1. The outdoor grill and surrounding area MUST remain clear of flammable substances such as gasoline, yard debris, wood, etc.
2. The airflow through the vent space located below the control panel must remain unobstructed.
3. **When using propane gas:**
   a. **The required ventilation openings in the enclosure must be clear of debris. See the PROPANE SAFETY INFORMATION section.**
   b. **The propane cylinder, regulator, and rubber hose must be in a location not subject to temperature above 125° F (51° C).**
4. The flames on each burner burn evenly along the entire burner with a steady flame (mostly blue). If burner flames are not normal, check and clean the orifice and burner/venturi tubes for insects and insect nests. A clogged tube can lead to a fire beneath the grill. A proper flame pattern will ensure safe operation and optimal performance. Adjust the air shutter as needed (see AIR SHUTTER ADJUSTMENT).
5. The in-line gas valve or gas cylinder valve must always be shut OFF when the grill is not in use.
6. The drip collector holes must be clear and unobstructed. Excessive grease deposits can result in a grease fire.

WARNING: NEVER cover the *entire* cooking or grill surface with griddles or pans. Overheating will occur, and burners will not perform properly when combustion heat is trapped below the cooking surface.

CAUTION: NEVER spray water on a hot gas unit.

The grill serial identification number is located on the underside of the drip tray handle. It is recommended that the drip tray first be removed and cleaned / emptied of its contents, then turned over to view. The unit rating label is located on the inside of the control panel.

MODEL SPECIFICATIONS

STAND-ALONE GRILL DIMENSIONS TABLE

Model	Height			Width		Depth	
	Floor to top (with oven)		Floor to top of shelf **(C)**	Left to right		Front to back	
	Open **(A)**	Closed **(B)**		Cart base **(D)**	Shelf to shelf **(E)**	Cart base **(F)**	Maximum outer **(G)**
C430s	57"	50"	36 1/2"	26 1/2"	51 1/2"	22"	24 3/4"
C540s	57"	50"	36 1/2"	33"	58"	22"	24 3/4"

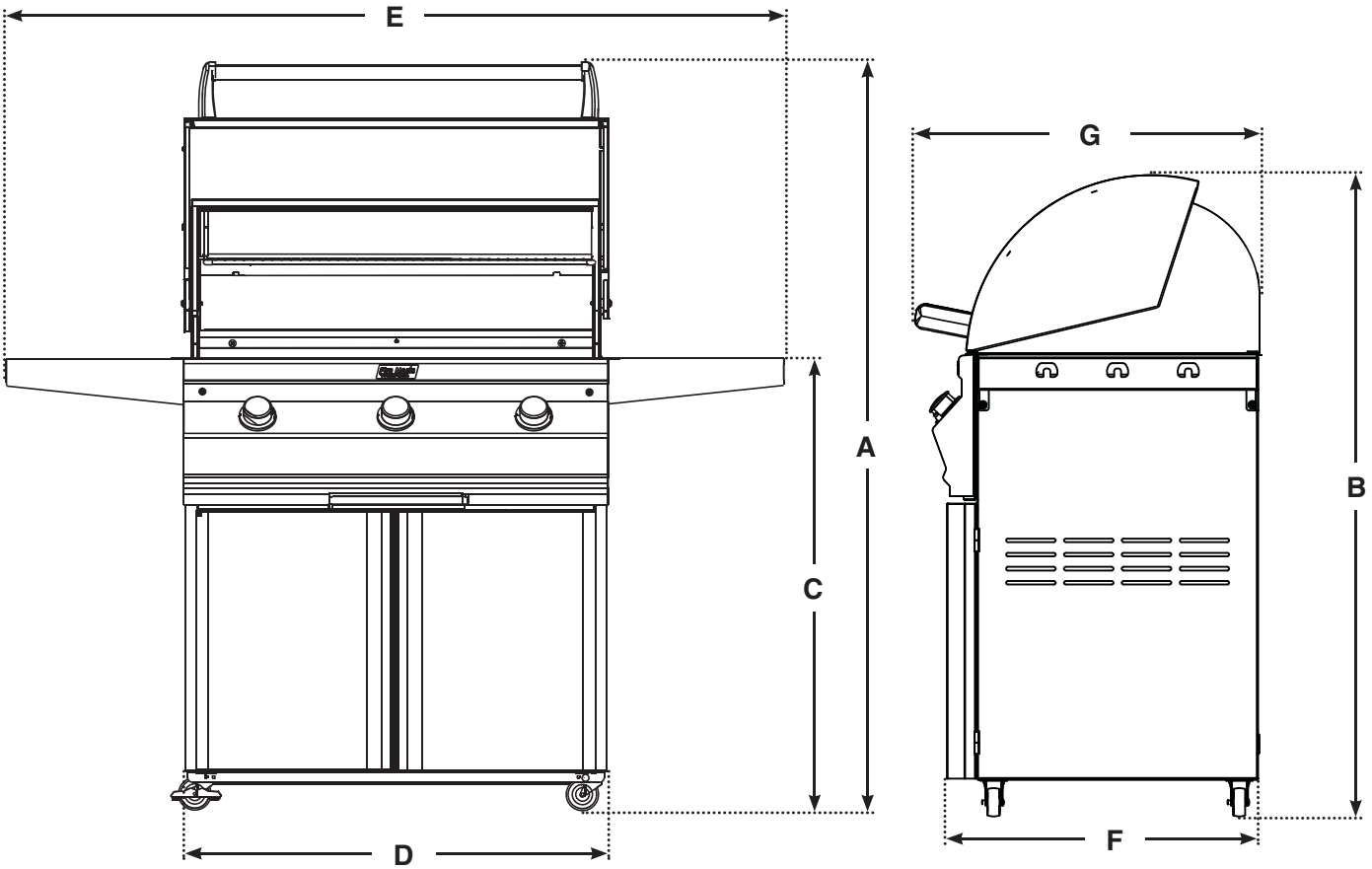

MODEL SPECIFICATIONS TABLE

Table 1	C430s	C540s
Main burner quantity N/P orifice drill size	2 #43 / #54	3 #45 / #55
Battery quantity Battery type	1 9-volt	

INSTALLATION REQUIREMENTS

Installation must be performed by a qualified professional service technician.

This grill is designed for outdoor use only. **DO NOT** use this grill inside a building, garage, enclosed area, or under any overhead construction.

DO NOT use this grill in or on a recreational vehicle or boat.

Important: The grill is not insulated. Refer to the information below to ensure all required clearances are met.

The grill must have a minimum clearance of 18" from combustible *materials/items* AT ALL TIMES.

SIDE AND REAR WALL CLEARANCES

For the minimum clearances between the grill and any side or rear walls, your setup must fall within one (or more) of the following:

A. Clearance between grill and combustible wall

- The grill must have a minimum of 18" right, left, and rear clearance from any combustible wall (see Fig. 10-1).

B. Clearance between grill and strictly non-combustible wall (*i.e. brick wall, see Fig. 10-2*)

- The grill must have a minimum of 4" right, left, and rear clearance from any non-combustible wall.
  (To allow for proper ventilation and prevent dangerous overheating.)

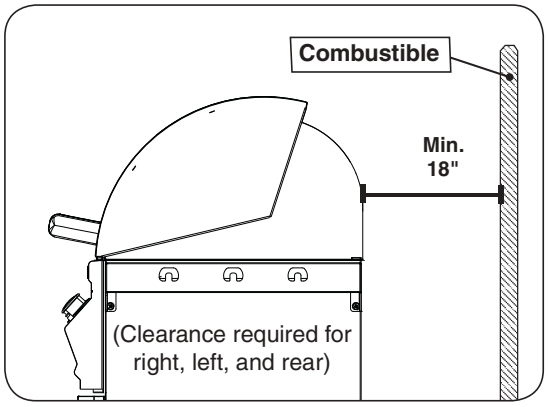

Fig. 10-1 Clearance **'A'** Diagram

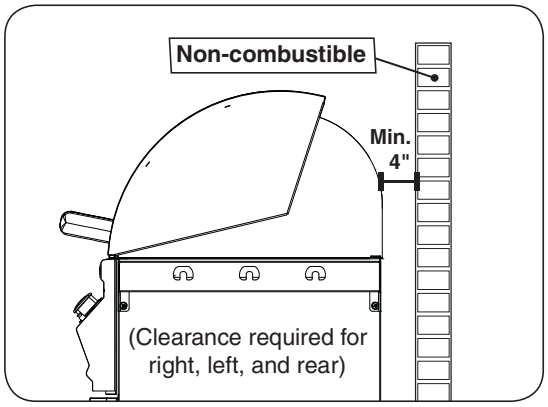

Fig. 10-2 Clearance **'B'** Diagram

The control panel **MUST** remain removable for servicing and air shutter adjustment (see PARTS LIST).

THIS UNIT MUST NOT BE LOCATED IN A FULLY ENCLOSED AREA OF ANY KIND.

ENSURE PROPER COMBUSTION AIR AND COOLING AIRFLOW

Proper airflow (Fig. 11-1) MUST be maintained for the grill to perform as it was designed. If airflow is blocked, overheating and poor combustion will result. Do not block the 1" (2.5 cm) front air inlet along the bottom of the control panel or more than 75% of the cooking grid surface with pans or griddles.

Note: The 1" (2.5 cm) front air space also allows access to the drip tray.

CAUTION: Wind blowing into or across the rear oven lid vent (Fig. 11-2) can cause poor performance and/or dangerous overheating. Orient the grill so that the prevailing wind blows toward the front of the grill (Fig. 11-3).

Important: **A shut-off valve (not included) in the gas line is required.** It provides for safety when the unit is not in use and for convenient maintenance and repair. It must be installed within 6 feet of the unit. Use a pipe joint compound resistant to all gasses on all male fittings except flare fittings.

GAS SUPPLY AND MANIFOLD PRESSURES:
For **natural gas** - normal 7" (17.78 cm) water column (w.c.), minimum 5" (12.7 cm), maximum 10 $^{1}/_{2}$" (26.7 cm). For **propane gas** - normal 11" w.c., minimum 10" (25.4 cm), maximum 13" (33 cm).

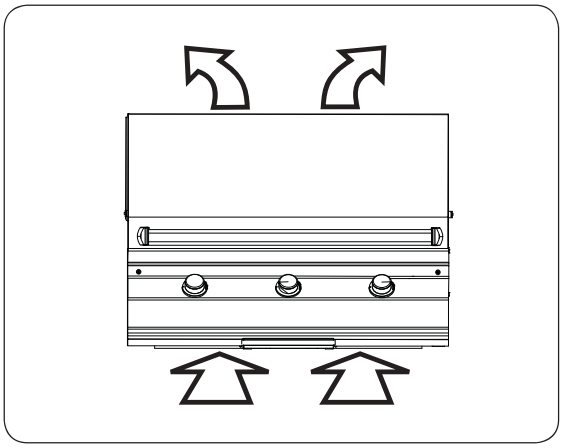

Fig. 11-1 Ventilation

Fig. 11-2 Airflow direction - **INCORRECT**

Fig. 11-3 Airflow direction - **CORRECT**

PROPANE SAFETY INFORMATION

WHEN OPERATING THIS APPLIANCE WITH PROPANE, ALL INSTRUCTIONS AND WARNINGS MUST BE OBSERVED. FAILURE TO DO SO MAY RESULT IN A FIRE OR EXPLOSION CAUSING SERIOUS INJURY OR DEATH.

WARNING

THIS APPLIANCE MUST BE INSTALLED AND OPERATED ACCORDING TO THE INFORMATION BELOW.

FAILURE TO PROPERLY VENT THE CABINET MAY RESULT IN A FIRE OR EXPLOSION CAUSING SERIOUS INJURY OR DEATH.

When using **propane gas**:

- **Propane gas** (also known as **L.P. gas**) is heavier than air and will accumulate or pool in an inadequately vented enclosure or recessed area.
- A leaking gas connection or valve unintentionally left open will create a hazard.
- If a pool of **propane gas** is ignited, an explosion will occur. Adequate venting at the floor level of the cabinet eliminates this danger.
- DO NOT store a spare propane-gas cylinder in or near the unit.

INSTALLATION SAFETY GUIDELINES

THIS UNIT MUST BE INSTALLED IN SUCH A MANNER THAT ALL VENT OPENINGS ON THE CABINET REMAIN CLEAR AND FREE OF ALL OBSTRUCTIONS AT ALL TIMES AND DURING ALL WEATHER CONDITIONS.

The gas cylinder, regulator, and rubber hose must be in a location not subject to temps. above 125° F (51° C).

WHEN A PROPANE CYLINDER IS INSTALLED INSIDE OF THE CABINET, THE GUIDELINES FOUND IN THE **SAFE USE & MAINTENANCE OF PROPANE GAS CYLINDERS** SECTION MUST BE FOLLOWED.

OPERATING THE UNIT SAFELY AND CORRECTLY

Every time you use the unit, **make sure that:**

1. The area around the unit is clear and free from combustible materials, gasoline and flammable vapors/liquids.
2. There is no blockage of the airflow through the vent openings located on the cabinet.
3. The hose is inspected (if applicable). See SAFE USE & MAINTENANCE OF PROPANE GAS CYLINDERS section.

DO NOT store any combustible materials, gasoline, and any other flammable vapors/liquids in the vicinity of the unit. Provide adequate clearance for servicing and operation.

SAFE USE & MAINTENANCE OF PROPANE GAS CYLINDERS

IMPORTANT FOR YOUR SAFETY

READ AND FOLLOW ALL WARNINGS PROVIDED WITH THE PROPANE-GAS CYLINDER.

When operating this appliance with a propane-gas cylinder, these instructions and warnings **MUST** be observed.

FAILURE TO DO SO MAY RESULT IN A SERIOUS FIRE OR EXPLOSION.

CYLINDER/CONNECTOR REQUIREMENTS

a. Propane-gas cylinders, valves, and hoses must be maintained in good condition and must be replaced if there is visible damage to either the cylinder or valve. If the hose is cut or shows excessive abrasion or wear, it must be replaced before using the gas appliance (see **e**.).

b. This unit, when used with a cylinder, should be connected to a standard 5-gallon (20 lb.) propane-gas cylinder equipped with an OPD (Overfill Prevention Device). The OPD has been required on all cylinders sold since October 1,1998, to prevent overfilling.

c. Cylinder dimensions should be approximately 12" (30.5 cm) in diameter and 18" (45.7 cm) high. Cylinders must be constructed and marked in accordance with the *Specifications for Propane Gas Cylinders of the U.S. Department of Transportation (D.O.T.)* or the National Standard of Canada, *CAN/CSA-B339, Cylinders, Spheres, and Tubes for Transportation of Dangerous Goods.*

d. The cylinder used must include a collar to protect the cylinder valve, and the cylinder supply system must be arranged for vapor withdrawal.

e. The pressure regulator and hose assembly (Fig. 13-1) *supplied* with this outdoor gas appliance (L.P. models only) must be used. Original and replacement pressure regulator and hose assemblies must be those specified by the manufacturer for connection with a cylinder connecting device identified as Type I by the *ANSI Z 21.58-2005/CGA 1.6-2005* (see PARTS LIST for ordering information).

f. The propane-gas cylinder valve must be equipped with a cylinder connection coupling device, described as Type I in the standard defined in paragraph **e**. above. This device is commonly described as an Acme thread quick coupler.

g. If the propane-gas cylinder comes with a dust plug, place the dust cap on the cylinder valve outlet whenever the cylinder is not in use.

QUICK COUPLER OPERATION

To connect the regulator/hose assembly to the propane-gas cylinder valve fitting: Press the hand nut on the regulator over the Acme thread fitting on the cylinder valve. Turn the hand nut clockwise to engage the threads and tighten until snug. The use of pliers or a wrench should not be necessary. Only cylinders marked “propane” may be used.

To disconnect: Turn the hand nut counterclockwise until detached (Fig. 13-1).

Important: Before using the unit, and after each time the cylinder is removed and reattached, check the hose for wear (see **a**.) and check all connections for leaks. Turn off the unit valves and open the main cylinder valve, then check connections with soapy water. Repair any leaks before lighting the unit.

CAUTION: Always turn the propane cylinder main valve off after each use, and before moving the unit and cylinder or disconnecting the coupling. This valve must remain closed and the cylinder disconnected while the appliance is not in use, even though the gas flow is stopped by a safety feature when the coupler is disconnected.

Carefully inspect the hose assembly each time before the gas is turned on. A cracked or frayed hose must be replaced immediately.

If the appliance is stored indoors, the cylinder must be disconnected and removed. Disconnected cylinders must be stored outdoors, out of the reach of children, with threaded valve plugs tightly installed, and must not be stored in a building, garage, or any other enclosed area.

FOR YOUR SAFETY

a. DO NOT store a spare propane-gas cylinder under or near this appliance.

b. NEVER fill the cylinder beyond 80-percent full.

c. IF THE INFORMATION IN **a.** AND **b.** IS NOT FOLLOWED EXACTLY, A FIRE CAUSING DEATH OR SERIOUS INJURY MAY OCCUR.

Fig. 13-1 Type I Acme thread quick coupler

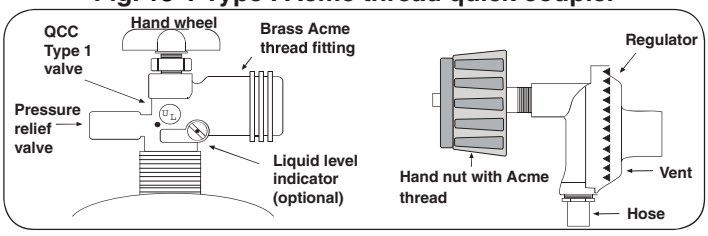

SECURING THE PROPANE-GAS CYLINDER

Fig. 13-2

1. Set the propane-gas cylinder into the support sleeve.

Fig. 13-3

2. Follow the instructions above to connect supply.

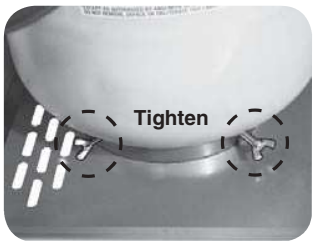

Fig. 13-4

3. Tighten the thumb screws to secure the cylinder.

UTILISATION SÛRE ET ENTRETIEN DES CYLINDRES DE GAZ DE PROPANE

IMPORTANT POUR VOTRE SÛRETÉ

LISEZ ET SUIVEZ TOUS LES AVERTISSEMENTS ÉQUIPÉS DE VOTRE CYLINDRE DE GAZ DE PROPANE.

En actionnant cet appareil avec un cylindre de gaz de propane ON DOIT observer ces instructions et avertissements.

LE MANQUE DE FAIRE AINSI PEUT AVOIR COMME CONSÉQUENCE UNE INCENDIE OU UNE EXPLOSION SÉRIEUSE.

CYLINDRE ET CONDITIONS ET CARACTÉRISTIQUES DE CONNECTEUR

a. Des cylindres et les valves de gaz de propane doivent être maintenus en bon état et doivent être remplacés s'il y a des dommages évidents au cylindre ou à la valve.

b. Ce gril, une fois utilisé avec un cylindre, devrait être relié à un gallon de la norme 5 (20lb.) cylindre de gaz de propane équipé d'un OPD (remplissez au-dessus du niveau le dispositif d'empêchement). L'OPD a été exigé sur tous les cylindres vendus depuis octobre 1.1998 pour empêcher le remplissage excessif.

c. Les dimensions de cylindre devraient être approximativement 12"(30.5cm) de diamètre et 18" (45.7cm) hauts. Des cylindres doivent être construits et marqués selon les caractéristiques pour des cylindres de gaz de propane du département des ETATS-UNIS du transport (D.O.T.) ou le niveau national du Canada, du CAN/CSA-B339, des cylindres, des sphères et des tubes pour le transport des marchandises dangereuses.

d. Le cylindre doit inclure un collier pour protéger la valve de cylindre et le circuit d'alimentation de cylindre doit être assuré le retrait de vapeur.

e. Le montage du régulateur de pression et le flexible (Fig. 14-1) fourni avec cet appareil au gaz en plein air (modèles au propane seulement) doit être utilisé. Assemblées d'origine et régulateur de pression et le tuyau de remplacement doivent être ceux spécifiés par le fabricant pour le raccordement d'un dispositif de cylindre de liaison identifiée comme de type I par le 21.58-2005/CGA ANSI Z 1.6 à 2005 (voir liste des pièces pour les informations de commande).

f. La valve de cylindre de gaz de propane doit être équipée d'un dispositif d'accouplement de raccordement de cylindre, décrit comme type I dans la norme définie dans le e. de paragraphe ci-dessus. Ce dispositif est généralement décrit comme coupleur rapide de fil de point culminant.

g. Si votre cylindre de gaz de propane vient avec une prise de la poussière, placez le bouchon anti-poussière sur la sortie de valve de cylindre toutes les fois que le cylindre n'est pas en service.

OPÉRATION DE COUPLEUR RAPIDE

Pour relier le regulator/hose à l'ajustage de précision de valve de cylindre de gaz de propane: Serrez l'écrou de main sur le régulateur au-dessus de l'ajustage de précision de fil de point culminant sur la valve de cylindre. Tournez l'écrou de main dans le sens des aiguilles d'une montre pour engager les fils et pour serrer jusqu'à ce que douillettement. L'utilisation des pinces ou de la clé ne devrait pas être nécessaire. Seulement le propane marqué par cylindres doit être employé.

Pour débrancher: Tournez l'écrou de main dans le sens contraire des aiguilles d'une montre jusqu'à isolé (fig. 14-1).

Important: Avant d'employer le gril, et ensuite chaque fois que le cylindre est enlevé et rattaché, examinez tous les raccordements pour déceler les fuites. Arrêtez les valves de gril et ouvrez la valve principale de cylindre, puis vérifiez les raccordements avec de l'eau savonneux. Réparez toutes les fuites avant d'allumer le gril.

ATTENTION: Tournez toujours la valve principale de cylindre de propane au loin après chaque utilisation, et avant de déplacer le gril et le cylindre, ou débrancher l'accouplement. Cette valve doit rester fermée et le cylindre a débranché alors que l'appareil n'est pas en service, quoique l'écoulement de gaz soit arrêté par un dispositif de sûreté quand le coupleur est débranché.

Inspectez soigneusement l'ensemble de tuyau chaque fois avant que le gaz soit allumé. Un tuyau fissuré ou effiloché doit être immédiatement remplacé.

Si l'appareil est stocké à l'intérieur, le cylindre doit être disconnected et a enlevé. Des cylindres Disconnected doivent être stockés dehors, hors de la portée des enfants, avec les prises de valve filetées étroitement installées, et ne doivent pas être stockés dans un bâtiment, le garage, ou n'importe quel autre secteur inclus.

POUR VOTRE SÛRETÉ

a. Ne stockez pas un cylindre de gaz disponible de propane dessous ou ne vous approchez pas de cet appareil.

b. Ne remplissez jamais cylindre au delà de 80 pour cent de plein.

c. SI L'INFORMATION DANS "A" ET "B" N'EST PAS SUIVIE EXACTEMENT, UN FEU CAUSANT LA MORT OU DES DOMMAGES SÉRIEUX PEUT SE PRODUIRE.

Fig. 14-1 type coupleur rapide de fil de point culminant d'l

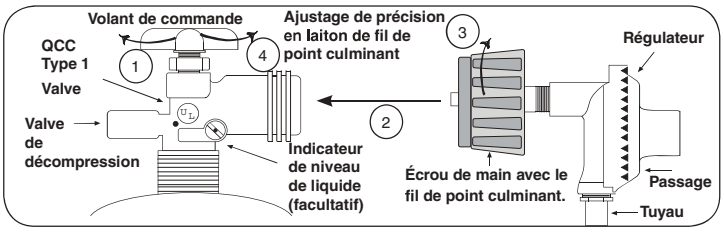

FIXATION DU CYLINDRE DE GAZ DE PROPANE

Fig. 14-2

1. Ensemble cylindre-propane gaz dans le manchon de support.

Fig. 14-3

2. Suivez les instructions ci-dessus pour connecter l'alimentation.

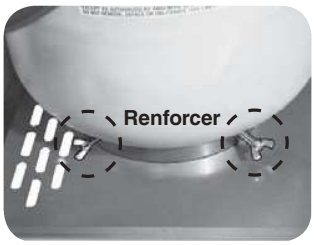

Fig. 14-4

3. Serrer les vis de serrage pour fixer le cylindre.

INSTALLATION

LOCATION PREPARATION

Prepare a flat, level surface capable of supporting the weight of the stand-alone grill and convenient to the gas supply if connecting to a gas line.

WHEELS AND CASTERS

To lock a caster press down on the left lever until it stops and the caster will not turn. To unlock, press down on the right lever.

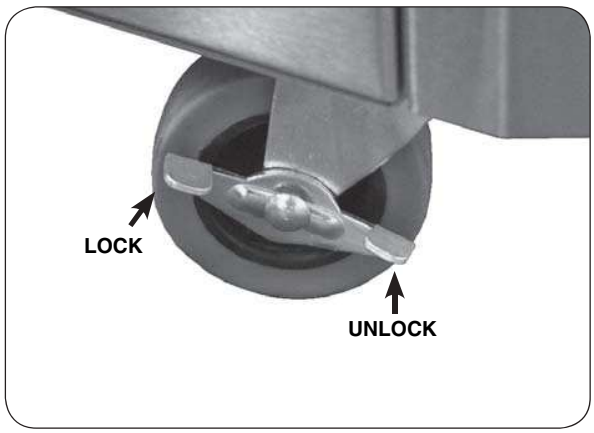

Fig. 15-1 Lock/unlock wheels

CONNECT THE GAS SUPPLY

For connecting a propane unit to a portable propane tank, read the safety warnings and follow the instructions in the section SAFE USE AND MAINTENANCE OF PROPANE GAS CYLINDERS.

For household propane or natural gas units:

1. **Turn OFF the gas supply at the source.** The quick disconnect hose is pre-installed on the valve manifold at the manufacturer. Run the hose through the hole in the bottom rear of the stand-alone unit, to the gas supply.
2. A shut-off valve is required within 6 feet of the unit. ***If shut-off valve is connected to end of gas supply stub:***
   - Connect the quick disconnect hose to the shut-off valve (see Fig. 15-2). Tighten securely.

   If shut-off valve is installed in-line:
   - Install the supplied flare adapter to the gas supply using a pipe joint compound resistant to all gasses (see Fig. 15-2). Tighten securely.
   - Connect the quick disconnect hose to the flare adapter (see Fig. 15-2). Tighten securely.
3. Turn all burner valves to the **OFF** position. Turn the gas supply on. Then carefully check *all* gas connections for leaks with a brush and soapy water before lighting. NEVER USE A MATCH OR OPEN FLAME TO TEST FOR LEAKS.

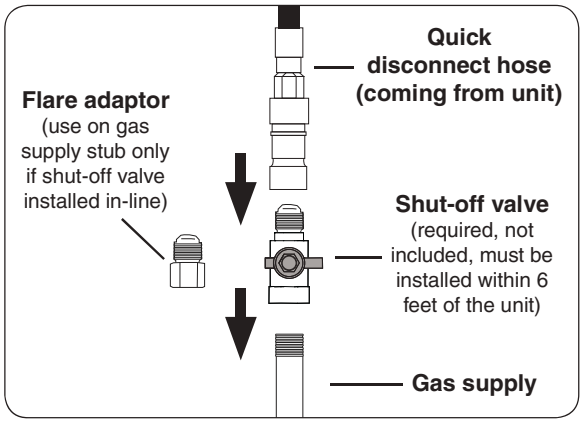

Fig. 15-2 Connecting to a gas line

INSTALL THE FLAVOR GRIDS

Place the flavor grids directly onto the studs on the burners. See Fig. 16-1. The flavor grids allow heat from the burners to be evenly distributed throughout the cooking area. They are stainless steel and will heat and cool quickly, making your grill very responsive to the changes you specify in grill temperature. They are rust resistant and may be cleaned with standard oven cleaners. Some discoloring will be seen with use. This is normal for stainless steel and does not affect the function.

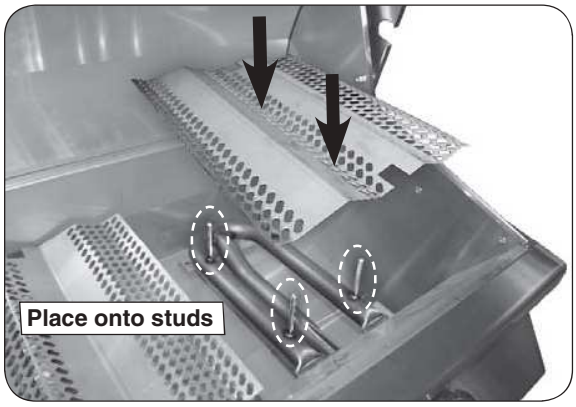

Fig. 16-1 Install flavor grids

RIGID SHELF INSTALLATION

This barbecue comes with two rigid shelves that must be attached. These can be attached using the four support screws provided and a Phillips-head screwdriver.

Important: Take caution to **not cross-thread** when tightening the screws.

1. Insert the top two screws into the side of the barbecue and screw them in about half way.
2. Line up the larger, bottom portion of the two keyhole openings with the two top screws and fit the two keyhole openings over the two screws. With the shelf pushed all the way against the side of the barbecue, lower the shelf so that the screws lock into the narrower, upper portions of the keyholes.

Note: The shelf will now stay in place on it's own.

3. Insert the bottom two screws into their holes and tighten them all the way.
4. Finally, tighten the upper two screws, completely.

To detach, reverse the process above.

View from under right shelf

IDENTIFICATION OF GRILL CONTROLS

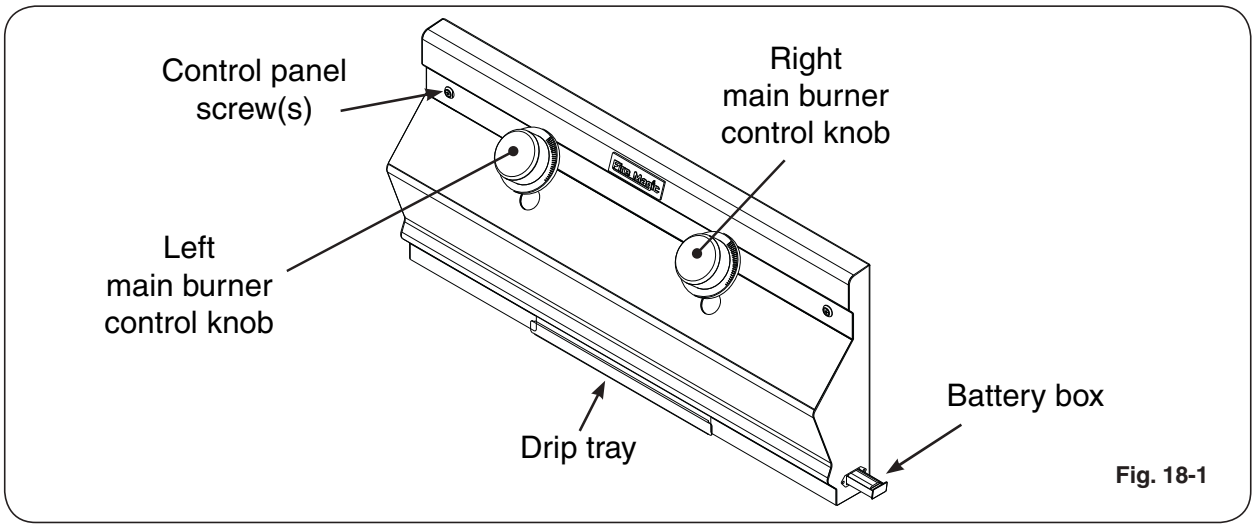

Fig. 18-1

C430 controls

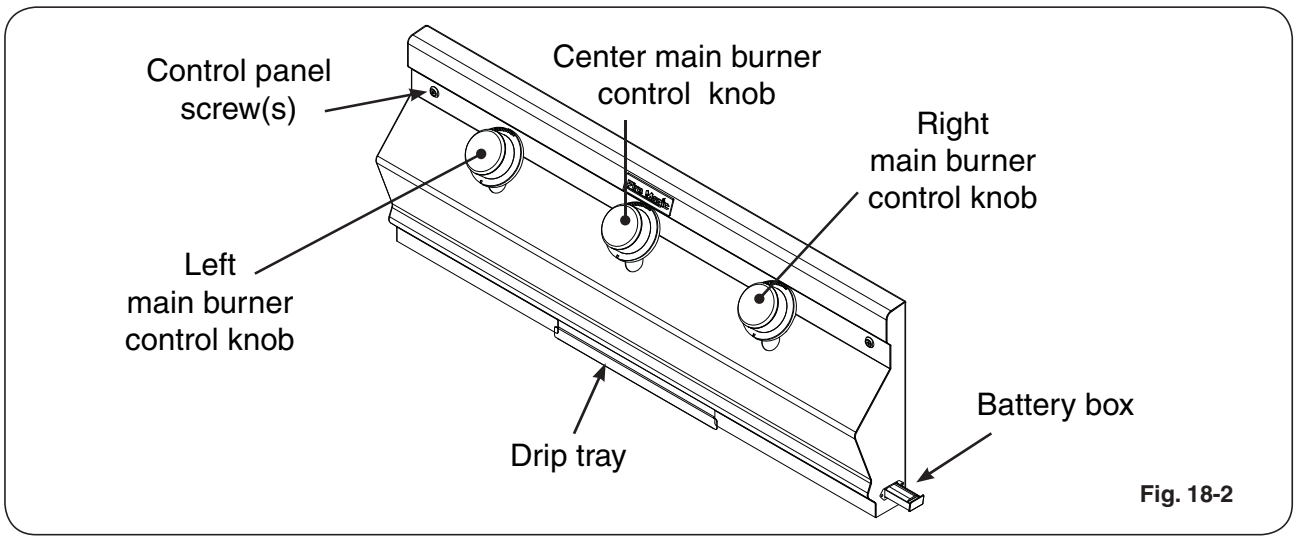

Fig. 18-2

C540 controls

LIGHTING (IGNITION) INSTRUCTIONS

Read all instructions before lighting, and follow these instructions each time you light the unit.

ELECTRONIC LIGHTING

Note: Electronic lighting requires an installed 9-volt battery with a good charge.

1. Open lid(s) or remove cover(s) from burner(s) to be lit.
2. Turn all gas control knob(s) to their **OFF** position(s).
3. Turn on the gas at its source.

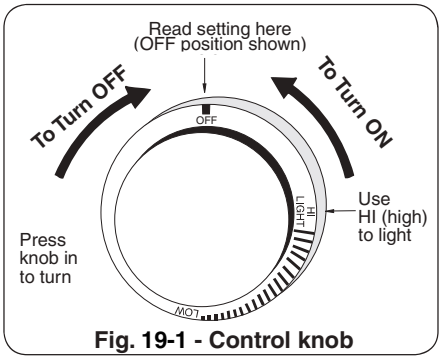

Fig. 19-1 - Control knob

Note: DO NOT turn on more than one valve at a time for either electronic or manual lighting.

4. Depress the desired control knob **for 5 seconds**, then, while pressing turn it counterclockwise to the **HI LIGHT** position. Once the burner lights, release the knob.

CAUTION: If a burner does not light within five (5) *seconds* of turning on the control knob, depress the knob and turn it to the **OFF** position. WAIT FIVE (5) *MINUTES* before repeating step 4. If you smell gas, follow the instructions on the cover of this manual. If the burners still do not light after several attempts, refer to the instructions for manual lighting.

5. Repeat step 4 for each additional burner to be lit.

REPLACING IGNITOR BATTERIES

To replace the 9V battery powering the ignitors, pull out the battery holder located on the outside of the control panel. Remove the old battery and replace it connecting the new battery. Replace the drawer (see Fig. 19-3).

WHEN USING A PORTABLE PROPANE TANK

Propane tanks are equipped with a safety shutdown device that may cause low or no gas pressure/flame at the burners if operating and lighting instructions are not followed exactly (See important note in the TROUBLESHOOTING section for more details.)

MANUAL LIGHTING

CAUTION: Always wait five (5) minutes for gas to clear after any unsuccessful lighting attempt.

1. Follow steps 1 through 3 (left).
2. Insert either a burning long-barrel butane lighter, a burning long-stem match, or a burning match held by a wire extension holder through the cooking grid opening to the top of the burner (Fig. 19-2).
3. While holding the match or lighter flame at the top of the burner, depress the control knob and while pressing turn it counterclockwise to the **HI LIGHT** position. Remove the lighter or match when the burner lights, and release the control knob.
4. If the burner does not light within five (5) seconds of turning the control knob, **immediately depress the knob and turn the valve to OFF**. WAIT FIVE (5) MINUTES before repeating steps 2 through 4 of the MANUAL LIGHTING instructions.

Fig. 19-2 **- Manual lighting**

SHUTTING OFF THE UNIT

To shut off the unit, depress each valve control knob and while pressing turn it clockwise to the **OFF** position.

Always close the valve from the gas supply after each use of the unit.

Fig. 19-3

ALLUMAGE DES INSTRUCTIONS (D'ALLUMAGE)

Lisez toutes les instructions avant l'allumage, et suivez ces instructions chaque fois vous lumière le unité.

ÉCLAIRAGE ÉLECTRONIQUE

Note: L'éclairage électronique exige une batterie installée de 9 volts avec une bonne charge.

1. Ouvrez les couvercles ou enlevez les couvertures des brûleurs pour être Lit.
2. Tournez tous les boutons de commande de gaz à leurs positions de repos.
3. Allumez le gaz à sa source.

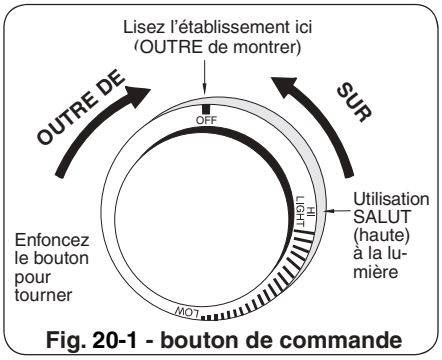

Fig. 20-1 - bouton de commande

Note: N'ouvrez pas plus d'une valve à la fois pour l'éclairage électronique ou manuel.

4. Diminuez le bouton de commande désiré pendant 5 secondes, puis, et tout en pressant le tour il dans le sens contraire des aiguilles d'une montre dans la position LÉGÈRE de HI. Une fois que le brûleur s'allume, libérez le bouton.

ATTENTION : Si un brûleur ne s'allume pas dans cinq (5) secondes d'allumer le bouton de commande, enfoncez le bouton et tournez-le à la position de repos. ATTENDEZ CINQ (5) MINUTES avant de répéter l'étape 4. Si vous sentez le gaz, suivez les instructions sur la couverture de ce manuel. Si les brûleurs ne s'allument toujours pas après que plusieurs tentatives, se rapportent aux instructions pour l'éclairage manuel.

5. Répétez l'étape 4 pour que chaque brûleur additionnel soit Lit.

REMPLACEMENT DES BATTERIES D'ALLUMEUR

Pour remplacer la pile 9V alimenter les allumeurs, retirez le support de la pile situé à l'extérieur du panneau de commande. Retirez la pile usagée et remplacez-la connecter la nouvelle pile. Remplacez le tiroir (voir la fig. le 20- 3).

EN EMPLOYANT UN RÉSERVOIR DE PROPANE PORTATIF

Des réservoirs de propane sont équipés d'un dispositif d'arrêt de sûreté qui peut ne pas causer le bas ou aucunes pression de gaz/flamme aux brûleurs si le fonctionnement et l'allumage des instructions ne sont pas suivis exactement (voir la note importante dans la section de dépannage pour plus de détails.)

ÉCLAIRAGE MANUEL

ATTENTION: Attendez toujours cinq (5) minutes le gaz pour se dégager après que n'importe quelle tentative non réussie d'éclairage.

1. Suivez les étapes 1 à 3 (à gauche).
2. Insérez un allumeur brûlant de butane de long-baril, une allumette brûlante de long-tige, ou une allumette brûlante tenue par un support de prolongation de fil par la grille à cuire s'ouvrant au dessus du brûleur (fig. 20-2).
3. Tout en maintenant le match ou flamme du briquet au dessus du brûleur, appuyez sur le bouton de commande et en appuyant son tour dans le sens antihoraire à la position HI LIGHT. Enlevez l'allumeur ou assortissez quand le brûleur s'allume, et libérez le bouton de commande.
4. Si le brûleur ne se allume pas dans les cinq (5) secondes de tourner le bouton de commande, enfoncez immédiatement le bouton et tournez la valve à AU LOIN. ATTENDEZ CINQ (5) MINUTES avant de répéter les étapes 2 à 4 des instructions manuelles d'éclairage.

Fig. 20-2 **- Éclairage manuel**

ARRÊT DU UNITÉ

Pour couper le unité, diminuez chaque bouton de commande de valve et tout en pressant tour il dans le sens des aiguilles d'une montre à la position de repos.

Fermez toujours la valve de la fourniture de gaz après chaque utilisation du unité.

Fig. 20-3

ACCESSORIES

GRILL BRUSH (optional)

Purchase a Fire Magic® stainless-steel grill brush (sold separately) to keep your grill cleaner. It comes with scraper for large particles and a replaceable head with brass bristles for overall cleaning.

Fig. 21-1

Grill brush with replacement head

THE COOKING GRID LIFTER

Hold the grid lifter by gripping the center section with the prongs pointing down (use an oven mitt or heavy glove if the grill is hot). Insert the notched end of the grid lifter into the cooking grid, in front of the midway point (front to back; Fig. 21-3), and central (left to right; Fig. 21-4). Twist the grill lifter (clockwise or counterclockwise) so the handle is parallel to the grill rods. This "seats" the spiked end of the grid lifter between two rods, enabling you to safely lift out the grid. Lift slowly and adjust the grid lifter, if necessary, for balance.

THE DRIP TRAY

The drip collection system allows you to brush or scrape excess dried residue from the grilling area directly into the drip tray (see the DRIP TRAY section for more information).

THE FLAVOR GRID(S)

Place each flavor grid directly over a burner. The solid areas of the grid should rest over the tabs found on the burner. See Fig. 21-5. **The slightly larger grids are designed to be placed over the outside burners, and the slightly smaller grid(s) are designed to be placed over the interior burner(s).**

Note: This allows heat from the burners to be evenly distributed throughout the cooking area. The flavor grids heat and cool quickly, making the grill very responsive to changes in heat from the burners.

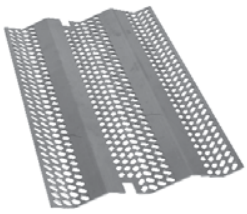

Fig. 21-5
Flavor grid

WARMING RACK (if equipped)

The warming rack (Fig. 21-2) is packed separately.

To install the warming rack, lift the front of the rack up slightly and insert the rack hangers into the two holes in the back of the inner oven hood. Then lower the front of the rack into a level position to lock the rack in place.

To remove the warming rack, lift up on the front of the rack until the rack hangers pull free from their supporting holes.

Note: Removing the warming rack before using the rotisserie will leave more clearance for the meat being cooked. (if applicable)

Fig. 21-2 Warming rack in place inside oven

Fig. 21-3

Fig. 21-4

Placement of the grid lifter in cooking grid

FIRE MAGIC® DRIP TRAY

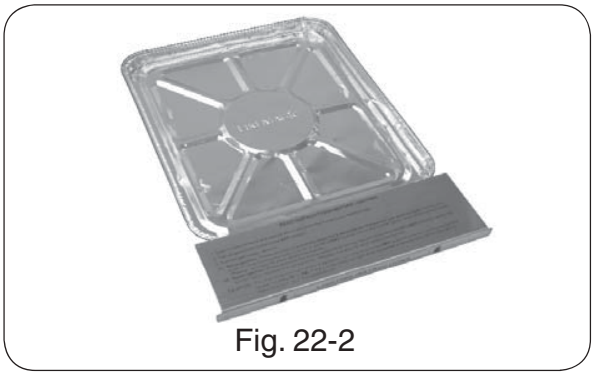

Fig. 22-2

Pull out the drip tray and place liner

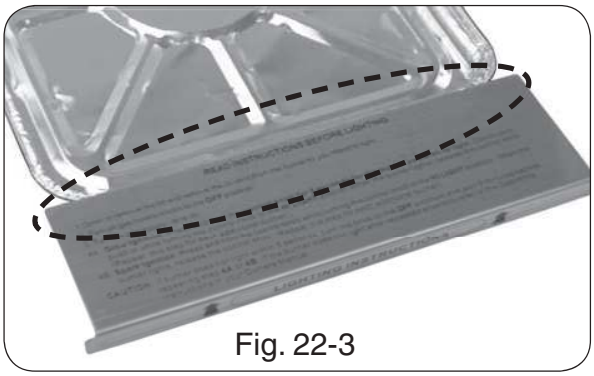

Fig. 22-3

Be sure liner fits under lighting instruction plate

The drip collector allows you to brush or scrape residue from the grill's inner liner into the drip tray. Following the manufacturers instructions and regular cleaning of the grill's interior with oven cleaner, will help to prevent grease fires.

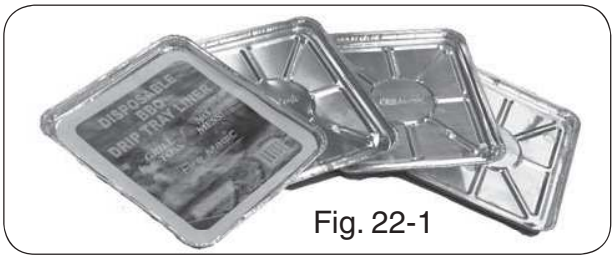

Fig. 22-1

Your grill includes a pack of four (4) Fire Magic® drip tray liners (Fig. 22-1). For your convenience in cleanup, place a liner into the drip tray before grilling.

To fit a liner into the drip tray, pull out the tray and set it on a flat, level surface. Place the liner in the drip tray as shown in Fig. 22-2 and carefully insert the tray back under the control panel.

Note: Be sure that the liner is properly placed into the drip tray. The front of the liner must fit under the drip tray's lighting instruction plate (see 22-3 detail).

After each use, wait for the grill to cool and carefully pull out the drip tray to check it. When a liner is nearing full, carefully lift it out of the drip tray, lifting with both hands to keep the tray level until it is safely discarded. Then insert a new drip tray liner.

Order more drip tray liners through your local Fire Magic® dealer.

Note: There are easy to follow lighting instructions etched onto the top of the drip tray handle.

Note: For models with match holders attached inside the drip tray, place the match holder off to one edge of the pan (Fig. 22-3). If necessary, mold the foil liner around them and the other features of the tray to create enough clearance space to open and close the tray without catching the liner.

CARE & CLEANING

APPLIANCE MUST BE COMPLETELY COOL WHEN CLEANING. DO NOT SPRAY ANY CLEANER OR LIQUIDS ON THE APPLIANCE WHEN HOT.

The appliance *must* be cleaned as often as once a month (depending on use) to prevent grease build-up and other food deposits.

INTERIOR

THE **BURNER PORTS** MUST BE KEPT CLEAN TO ENSURE PROPER IGNITION AND OPERATION.

Remove the burner (see orifice changing instructions) and clean the ports and slots as required. (For Fire Magic grills use Maintenance Kit part #MK-1.) Also inspect and clean the burner inlet for insects and nests. A clogged burner can lead to a fire in the bottom of the appliance.

The inside of the appliance may be cleaned periodically with oven cleaner if desired. Follow the oven cleaner instructions for proper use.

Be careful not to get oven cleaner on the outside surface of the appliance as it can permanently damage the finish.

EXTERIOR

Stainless steel surfaces when exposed to temperatures produced by the grilling process will change color. The stainless steel will change color from silver to brown and blue. This can be removed by using stainless steel cleaner.

Clean your appliance by first using grill cleaner to remove grease and dirt. Always wipe with the grain (See Fig. 23-1). Next, use stainless steel cleaner to restore the stainless steel color (Note: not for mirror finish). Finish by wiping your appliance down using polish wipes. **To clean any mirror finish (if applicable), use a quality brand glass cleaner only, not any of the cleaners mentioned above.**

If your appliance is installed in a seaside (salt air) or poolside (chlorine) location, it will be more susceptible to corrosion and must be maintained/cleaned more frequently. Do not store chemicals (such as chlorine or fertilizer) near your stainless steel appliance.

Due to the nature of stainless steel, surface iron oxide deposits may appear. Do not be alarmed – these deposits are removable with stainless steel cleaner through prompt and periodic maintenance. If not attended to promptly, permanent pitting may occur.

By following these recommendations, you will enjoy the beauty and convenience of your appliance for many years to come.

Fig. 23-1 - Wipe with grain

PROTECTING YOUR APPLIANCE FROM THE WEATHER

An optional cover will protect your appliance when not in use. (Allow to cool before covering.)

Please specify the model number and serial number of your appliance when ordering a cover.

IMPORTANT

IN THE EVENT OF A GREASE FIRE, IMMEDIATELY SHUT OFF THE MAIN GAS VALVE TO THE UNIT. KEEP THE LID OPEN AND ALLOW THE FIRE TO EXTINGUISH ITSELF. A THOROUGH INSPECTION BY A TRAINED SERVICE TECHNICIAN SHOULD BE CONDUCTED BEFORE FUTURE USE OF YOUR UNIT. THE SERVICE TECHNICIAN WILL CHECK THE SYSTEM FOR GAS LEAKS AND WILL CHECK ALL ELECTRICAL WIRING FOR DAMAGE. ALL GAS LEAKS AND WIRING MUST BE REPAIRED PRIOR TO FUTURE USE.

CONVERTING THE GAS TYPE

CAUTION: Make sure the grill is at a safe temperature and isolated from gas and electrical supplies before beginning.

For your safety, exercise caution, and make sure you have adequate hand protection, such as gloves, when handling metal parts.

CONVERT LABEL

This grill comes from the factory configured for one type of gas as marked on the label behind the control panel.

When the grill is converted, the label for the new gas (included at original shipping) MUST be applied <u>over the old label</u> mentioned above.

CONVERT REGULATOR

The gas regulator, located behind the control panel, must be set for the type of gas used to fuel the grill. To check the regulator setting, remove the cap in the center of the regulator (Fig. 24-1, A). Holding the cap vertical (see Fig. 24-1, B), the letters at the bottom of the plastic stalk indicate the gas type for which the regulator is currently configured.

If the text on the bottom of the regulator stalk does not match the gas type connected to the grill, remove the stalk from the cap, invert, and replace into center of cap. Replace cap on the regulator, screwing down until snug.

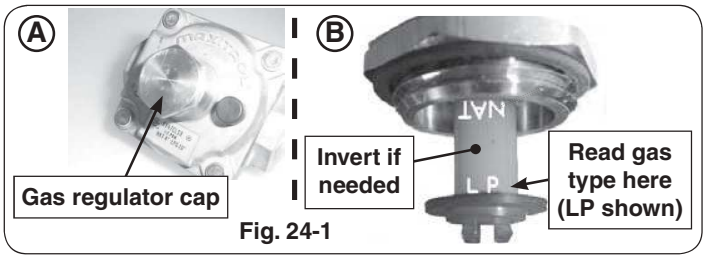

Fig. 24-1

CONVERT GAS ORIFICES

When converting the grill to a different gas type, each burner's orifice must be replaced with the corresponding orifice for the new gas.

See MODEL SPECIFICATIONS TABLE, Table 1 at the beginning of this document to determine the proper orifice sizes for each burner.

<u>See the following section for details on orifice conversion.</u>

Important: It is critical to the operation of each burner that its orifice be fully inserted into the center of its orifice opening.

<u>WARNING</u>

HAZARDOUS OVERHEATING WILL OCCUR IF A NATURAL-GAS ORIFICE IS USED WITH PROPANE GAS.

CONNECT TO NEW GAS SUPPLY

Plumb the unit as appropriate for the new gas supply. (Additional components may be needed for your specific setup.) **Be sure to leak test at all connections.**

Natural-gas to propane-gas conversions using a tank internal to a portable grill require installation of a propane tank holder (not included). This tank holder must be purchased separately from the manufacturer.

CONVERT/CHECK MAIN BURNER ORIFICES

1. Remove the cooking grid and flavor grid from above the burner you are working and set them aside.
2. Locate the burner. Slightly pinch and remove the burner clip (located over the rear center of the burner) from the burner support and set aside.
3. Carefully lift the burner from the burner support and out from the hole in the forward fire wall (see Fig. 24-2).
4. Use a $^{3}/_{8}$" hex nut driver to remove the exposed orifice (Fig. 24-3). Check orifice. If needed, replace it with the correct orifice for the new gas.
5. Replace the burner by first sliding the open cylindrical end of the burner around the orifice, enveloping it and centering on it, then lower the back end anchor pegs into the anchor peg holes.

Note: It is <u>critical</u> to the continued safe functioning of the burner that the orifice is centered and completely inside the burner gas inlet.

6. Re-install the burner clip around the burner and into the holes in the burner support.
7. Replace the flavor grid and then the cooking grid so that the cut-out section is in front.
8. Repeat these steps for each main burner.

Fig. 24-2

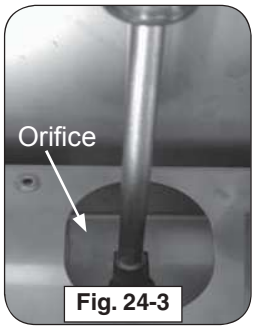

Fig. 24-3

BURNER AIR SHUTTER ADJUSTMENT

AIR SHUTTER ADJUSTMENT

Important: Air shutters are preset at the factory based on the gas the grill is built to burn. However, altitude or other local conditions may require air shutter adjustment for proper combustion.

MAIN BURNER

Flames from a properly adjusted main burner with no wind or breeze present will appear fairly steady, consistent, and mostly blue. If the tip of a flame were to turn orange, it should only do so briefly and then become blue again. The flames will appear to burn while touching the burner ports (see Figure 25-1).

If the flames have orange in them and appear to undulate slowly from side to side, or if some of them appear to lift off the burner instead of touching it, then adjust the air shutter, as instructed below.

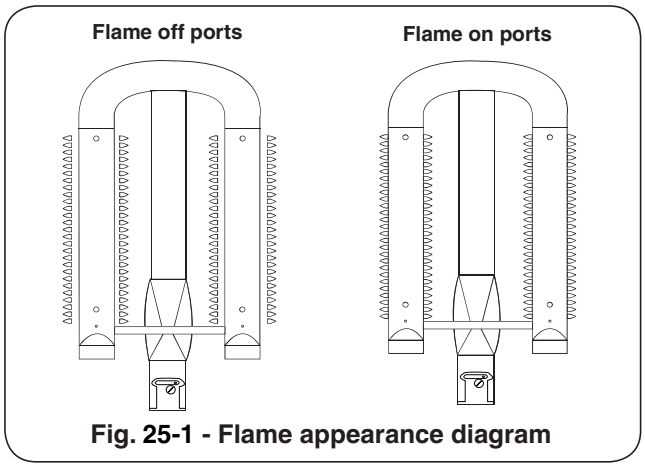

Fig. 25-1 - Flame appearance diagram

CAUTION: Turn all burner control knobs to the **OFF** position and turn off the gas supply at the source before removing or adjusting a burner.

WARNING

Wait for the burner to be cool or use heavily insulated heat-resistant gloves when handling the burner.

1. Follow the safety precautions and steps for main burner removal in the CHANGING THE MAIN BURNER ORIFICES section (steps 1-2).

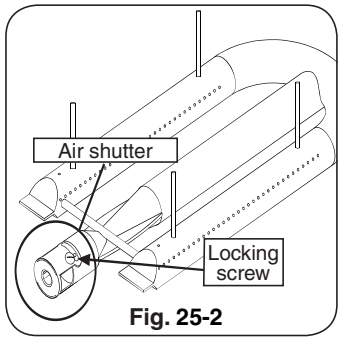

Fig. 25-2

2. Adjust the air shutter opening by loosening the adjustment screw with a screwdriver, then turn the air shutter to open or close it (see Fig. 25-2).

Shutter Setting	Flame Condition
Open too far	**Flames shorten and lift off the burner**
Ideal setting	**Blue flames just touching burner**
Closed too far	**"Lazy" flames with orange in them**

Too large an air shutter opening will allow too much air into the burner, which will cause the flames first to shorten and then to appear to lift up off the ports. For the bottom of the flames to move closer to the ports, close the air shutter more.

If the air shutter opening is too small or closed, the flames will present consistently orange tips and become "lazy," slowly undulating back and forth.

For propane gas, ideal settings tend to be just slightly open. For natural gas, which generally requires less primary air than propane, the main burner air shutter may be nearly closed.

3. Adjust the air shutter opening and then replace the burner.
4. Follow the lighting instructions in this manual to light the burner.
5. Repeat steps 1-4 until the flames appear to touch the burner ports, burning fairly steadily and mostly blue (see Fig. 25-1).
6. Replace the burner, burner clip, flavor grid, and cooking grid (see CHANGNG THE MAIN BURNER ORIFICE section, steps 4-5).

   Repeat these steps for each main burner.

CONTROL PANEL REMOVAL

To remove the control panel:

1. **Turn the control knobs to the OFF position and turn off the gas supply to the unit.**
2. Remove the drip tray.
3. Pull the control knobs from the stems and set aside.
4. Using a Phillips screwdriver, unscrew and remove the control panel fastener screws and washers (located on the left and right front face of the control panel). Retain the screws for later re-installation.
5. Carefully open the control panel by lifting and pulling the control panel from the frame, allowing it to rest on the internal chain(s).

Important: During reinstallation; prior to opening the gas shutoff valve, be sure the control knobs are in the OFF position.

TROUBLESHOOTING

If you have trouble with this Fire Magic® unit, please use this list to identify the problem. By trying one or more of the solutions to the possible cause, you should be able to solve the problem. If this list does not cover your present problem, or if you have other technical difficulties with the unit, please contact your local Fire Magic® dealer or visit our web site at *www.rhpeterson.com.*

PROBLEM	POSSIBLE CAUSE	CORRECTION
Ignition system failure	1. Low battery. 2. Improper air shutter adjustment 3. Ignition wire disconnected 4. Low gas pressure 5. Ignitor malfunction 6. Ignitor switch malfunction on valve	1. Replace ignitor battery. 2. Adjust air shutters. 3. Plug wires back into ignition switches. 4. Have the gas co. check supply pressure. 5. Contact dealer for replacement. 6. Contact dealer for replacement.
Insufficient heat / low flame	1. Improper air-shutter adjustment 2. Using propane orifice for natural gas 3. Low gas pressure/flame (propane) 4. Low gas pressure/flame (natural) 5. L.P. regulator hose cracked due to age	1. Adjust air shutters. 2. Check/change orifices. 3. Shut off all valves, including propane tank, and follow lighting instructions exactly. (See important note* below.) 4. Have the gas co. check pressure at unit. 5. Replace L.P. regulator hose.
Uneven heating	1. Burner ports partially blocked by debris 2. Small spiders or insects in burner 3. Improper air shutter adjustment	1. Remove burners and clean out ports. 2. Inspect burners and orifices for spider webs or other debris that may block flow. 3. Adjust air shutter.
Burner goes out on LOW	1. Valve “Low” setting needs adjustment	1. Light burner on HIGH, immediately turn to LOW setting. Remove knob from valve and using a small flat screwdriver, slowly turn the adjustment screw in the stem, a little at a time (30° to 45°), in either direction, until the flame is approximately 1/4” in height from burner ports.

Table 2

*** Important:** Propane tanks are equipped with a safety shutdown device that may cause low or no gas/flame at the burners if operating and lighting instructions are not followed exactly. If you suspect the propane tank safety shutoff is in effect, shut off all burner control valves and the propane tank valve. Then read and follow the LIGHTING INSTRUCTIONS exactly. Lighting instructions are located in your owner’s manual and printed on the unit’s metal drip tray. If the problem persists, continue troubleshooting, or contact your local dealer or R. H. Peterson for assistance.

WARRANTY

PETERSON FIRE MAGIC GRILLS AND ACCESSORIES

LIMITED WARRANTY

Robert H. Peterson Co. ("RHP") warrants your Fire Magic® grill to be free from defects in material and workmanship.

Fire Magic® cast stainless-steel burners, stainless-steel rod cooking grids, and stainless-steel housings are warranted for as long as you own your Fire Magic® grill **-- LIFETIME**. (Except as noted below.)

Fire Magic Choice stainless steel tubular burners are warranted for **TWENTY (20) YEARS**.

Fire Magic® cast brass burners, brass valves, inner liners, manifold assemblies, and backburner assemblies (except ignition parts) are warranted for **FIFTEEN (15) YEARS**.

Fire Magic® Electric Grills, including stainless steel grid, and housings are warranted for **TEN (10) YEARS**.

Fire Magic® Infra-red burners, flavor grids, Charcoal stainless steel grills, and Smokers are warranted for **FIVE (5) YEARS**; except for the charcoal pan, charcoal grid, wood pellet screen, thermometer, and ash tray; which are warranted for **ONE (1) YEAR**.

Fire Magic® sideburners and all other Fire Magic® grill components (except ignition and electronic parts) are warranted for **THREE (3) YEARS**.

Fire Magic® ignition systems (excluding batteries), electronic components (including lights and thermometers), and grill accessories are warranted for **ONE (1) YEAR**.

A COPY OF YOUR SALES SLIP FOR PROOF OF PURCHASE IS REQUIRED

This warranty applies to the original purchaser for products which are installed in the United States or Canada and which are operated and maintained as intended for single family residential usage. This warranty is valid only with proof of purchase, shall commence on the date of purchase, and shall terminate (both as to original and any replacement products) on the anniversary date of the original purchase of the product stated on the above schedules.

This warranty covers defects in material and workmanship. This warranty **does not** cover parts which become defective as a result of negligence, misuse, use not in compliance with the Owner's Manual/Installation Instructions, accidental damage, improper handling, improper storage, improper installation, lack of required routine maintenance (as specified in the Owner's Manual/Installation Instructions), electrical damage, local gas impurities or failure to protect against combustibles. Product must be installed (and gas must be connected) as specified in the Owner's Manual/Installation Instructions by a **qualified professional installer**. Modifications to products which are not specifically authorized will void this warranty. Accessories, parts, valves, remotes, etc. when used must be Peterson products or this warranty is void. Warrantied items will be repaired or replaced at Peterson's sole discretion. This warranty **does not** apply to rust, corrosion, oxidation, or discoloration unless the affected part becomes inoperable.

This warranty **does not** cover labor or labor related charges, except as provided by separate specific written programs from the Peterson Co. All repair work must be performed by a qualified professional service person and requires prior approval of Peterson.

Peterson may require the defective product or part to be returned to the factory to determine the cause of failure. Peterson will pay freight charges if the product or part is determined to be defective. This warranty does not cover breakage in shipment from our (Independent) distributor to its customer if the damage is determined to have occurred during that shipment.

This warranty specifically excludes liability for **indirect**, **incidental**, or consequential damages. Some states and provinces do not allow the exclusion or limitation of incidental or consequential damages, so the above exclusion may not apply to you. This warranty gives you specified legal rights, and you may have other rights that vary from state to state or province.

For additional information regarding this warranty, or to place a warranty claim, contact the R. H. Peterson dealer where the product was purchased.

TO REGISTER YOUR PRODUCT ONLINE GO TO: WWW.RHPETERSON.COM, AND CLICK ON PRODUCT REGISTRATION. THANK YOU FOR YOUR PURCHASE.

Quality Check			**Date:**_____		
Burner Orifices	**Nat.**	**L.P.**	**Leak Test:** _____	**Model#:**	_____
Main:	____	____	**Burn Test:** _____	**Serial#:**	_____
Other:	____	____	**Gas Type:** **Nat. / L.P.**	**Air Shutter:**	_____
				Inspector:	_____